NAVIEN

Service Manual

Getting Service

If your boiler requires service, you have several options for getting service:

- Contact an official Technical Assistance Service (TAS) at 0844 332 2323 or go to the website (www.navien.co.uk).
  For warranty service, always contact an official Technical Assistance Service (TAS) first.
- Contact the technician or professional who installed your boiler.

When contacting an official Technical Assistance Service (TAS), please have the following information available:

- Model number
- Serial number
- Date purchased
- Installation location and type
- Error code, if any appears on the front panel display

Version: 1.1 (September, 2026)

NAVIEN

NAVIEN UK LTD
Building 2, Guildford Business Park, Guildford, GU2 8XG
TEL 0844 332 2323 www.navien.co.uk

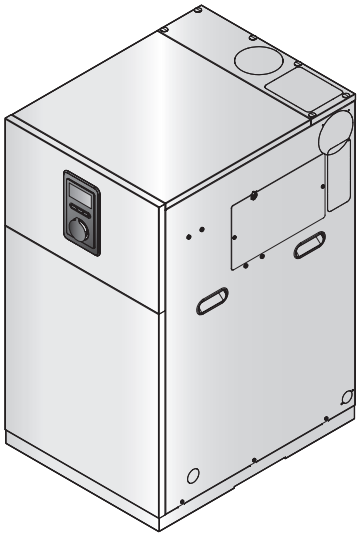

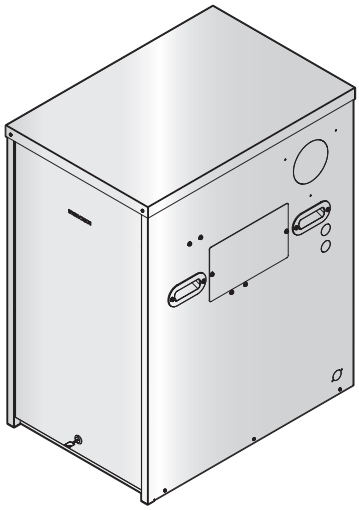

NAVIEN

Condensing Blue Flame Oil-Fired Boiler

Service Manual

Installation Location	Type	Model
Internal	Regular	LCB500-21RI LCB500-26RI LCB500-34RI
	System	LCB500-21SI LCB500-26SI LCB500-34SI
	Combi	LCB500-21CI LCB500-26CI LCB500-34CI
External	Regular	LCB500-21RX LCB500-26RX LCB500-34RX
	System	LCB500-21SX LCB500-26SX LCB500-34SX
	Combi	LCB500-21CX LCB500-26CX LCB500-34CX

Keep this manual near this boiler for future reference whenever maintenance or service is required.

⚠ WARNING

If the information in these instructions is not followed exactly, a fire or explosion may result, causing property damage or personal injury.

- **Do not store or use petrol or other flammable vapours and liquids in the vicinity of this or any other appliance.**
- **Installation and service must be performed by a qualified installer or service agency.**

CE 1015 OFTEC™ ErP A

NAVIEN

Revisions

Version	Description of changes	Date
1.0	First Issue	November/2025

Contents

1. Safety Information 7

2. About the Boiler 11

2.1 Items Included 11
2.2 Accessories 11
2.3 Service Tool 12
2.4 Specifications 13
2.5 Components 15
2.6 Dimensions 19

3. Installing the Boiler 21

3.1 Installation Procedure 21
3.2 Choosing an Installation Location 22

4. System Details 24

4.1 About the PCB 24
4.2 Setting the Heating Demand 25
4.3 Connecting Applications - Low Voltage (DC) Application Part 26
4.4 Connecting Applications to the AC Application Part 28
4.5 Setting the DIP Switches 30
4.6 Front Panel 31
4.7 Wiring Diagram 47

5. Troubleshooting 48

5.1 Error Self-diagnostic/Action 48
5.2 Error Conditions and Check Items 51

6. Key Components Description 77

6.1 Heat Exchanger Assembly 77
6.2 Burner Assembly 78
6.3 Oil Pump Assembly 79
6.4 Ignition Transformer 80
6.5 Circulation Pump 81
6.6 Expansion Vessel 82
6.7 Inlet Adaptor Assembly 83
6.8 Outlet Adaptor Assembly 84
6.9 Main Controller 85
6.10 Front Panel 86
6.11 Heat Exchanger for How Water Supply 87
6.12 Flow Control Valve 88
6.13 Mixing Valve 89
6.14 3-Way Valve 90
6.15 APS 91

7. Replacement of Parts 92

7.1 Replacement Procedure 92
7.2 Components Replacement Instructions 92

8. Inspection and Maintenance Schedule 97

8.1 Annual Servicing 97
8.2 Maintenance Schedules 97
8.3 Maintaining the Boiler 98
8.4 Protecting the Boiler from Freezing 99
8.5 Maintaining the Parts 100

9. Components Diagram and Part List 101

9.1 Base Parts 101
9.2 Combustion Parts 104
9.3 DHW Parts 107

Warranty

Annual service

For Navien warranty to be valid an annual service must be carried out by a suitably qualified installer every year after installation. The cost of this annual service is not included in the warranty.

Your Warranty Conditions

Navien Condensing Blue Flame Oil-Fired Boilers are covered by a 2-year manufacturers warranty as standard, with extended warranties of up to 10 years.

For Navien warranty to be valid an annual service must be carried out by a suitably qualified installer every year after installation.

1. Navien Warranty registration is simple. Just complete the Warranty Registration Card and return to Navien within 30days of installation. The details of installation will be automatically registered within Navien Service Management System. Alternatively, please telephone one of our Warranty Registration Advisors on 0844 332 2323.
2. Navien offers a 10-year warranty on Condensing Blue Flame Oil-Fired Boiler LCB500. However, this is subject to Terms and Conditions. For more information please telephone one of our Warranty Registration Advisors on 0844 332 2323.
3. The completed Benchmark Checklist will be required in the event of any warranty work and may be required by the local Building Control Inspector.
4. The cost of this annual service is not included in the Warranty.
5. The start-up and annual service are to be carried out by a suitably qualified installer.
6. Navien Warranty will be null and void in the following cases:
   - If the annual service by a suitably qualified and Oftec registered installer has not been carried out.
   - If the boiler has not been installed in accordance with the applicable laws and regulations for this type of appliance.
   - If the boiler has not been started up immediately after its installation, by a suitably qualified installer.
7. Failure to install in strict compliance with the Installation & Operation Manual procedures, failures due to misuses or incorrect installation, use of nonsuitable power or fuel, supply with water with physical or chemical properties causing incrustation or corrosion, incorrect handling of the appliance and, in general, for any reason beyond Navien's control, are excluded from this warranty. This warranty does not affect the consumer's rights as stipulated by law.
8. If your Navien boiler develops a fault your first action should be contact your installer, as his professional assessment is needed under the terms of Navien Warranty. If you are unable to contact your installer, please phone Navien Service: 0844 332 2323 or visit Navien website: www.navien.co.uk

Suitable Use

The LCB500 boiler is designed with all the necessary safety systems. Unsuitable use of the appliance for a purpose it was not designed for entails risk of damage to the boiler or property, and even of injury to the user and other persons.

The LCB500 boiler is designed to generate heat for domestic hot water and to be connected to central heating systems. Any use other than the above will be considered unsuitable use of the boiler. In such cases the manufacturer/supplier shall not be liable for any damage caused, and the user will be liable for the damage. Correct use of the boiler includes reading the user and installation instructions and all applicable documents, and complying with the maintenance and inspection conditions.

Everyday Care

Clean the outside of the boiler with a damp cloth with a little detergent. Do not use abrasive products to clean the boiler.

Waste Recycling and Disposal

Observe the applicable national regulations and standards concerning waste disposal.

The Boiler

Neither the floor standing boiler or its accessories are to be disposed of with the domestic waste. Ensure the appliance and its accessories, where applicable, are suitably disposed of.

Packaging

The transport packaging will be disposed of by the specialist technician who carried out the installation.

IMPORTANT

- The oil nozzle and braided oil hoses supplied with the boiler are only covered for the first 12 months until the first service. Both of these components must be changed at the first service and on every other annual service thereafter.
- Do not let the fuel supply run out before you re-order. There may be Sludge in the bottom of the storage tank, this may be pulled into the oil lines and oil pump. It is recommended that the boiler is turned off when the oil tank is refilled and that the fuel is allowed to settle for an hour before the boiler is turned back on.

Abbreviations and Definitions

Abbreviation	Definition
APS	Air Pressure Sensor
DHW	Domestic Hot Water
EMI	Electromagnetic Interface
GPM	Gallons Per Minute
HTL	High Temperature Limiter
PCB	Printed Circuit Board
RPM	Revolutions Per Minute

1. Safety Information

The following safety symbols are used in this manual. Read and follow all safety instructions in this manual precisely to avoid unsafe operating conditions, fire, explosion, property damage or personal injury.

DANGER

Indicates an imminently hazardous situation which, if not avoided, could result in severe injury or death.

WARNING

Indicates a potentially hazardous situation which, if not avoided, could result in injury or death.

CAUTION

Indicates a potentially hazardous situation which, if not avoided, could result in property damage.

Note

Used for emphasis or for providing useful information not directly connected with the surrounding text but of importance to the user.

DANGER

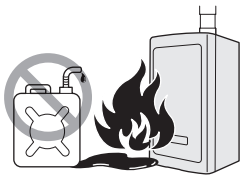

If oil fumes or leaks from the appliance:

- Extinguish any naked flames.
- Isolate the electrical supply.
- Isolate the fuel supply to the boiler.
- Rectify the fault.

Do not use or store flammable products, such as petrol, solvents, or adhesives in the same room or area as the boiler.

- The boiler has a main burner flame that can turn on at any time and can ignite flammable vapours. Vapours from flammable liquids can explode and catch fire, causing severe burns.
- Vapours cannot be seen and are heavier than air. They can travel long distances along the ground and can be carried from other rooms to the boiler's main burner flame by air current.
- Keep all flammable products far away from the boiler and store them in approved containers. Keep the containers closed tightly and out of the reach of children and pets.

⚠ WARNING

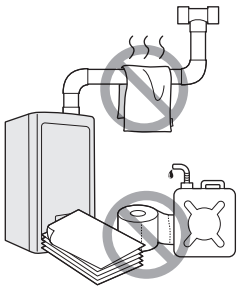

- **Do not store or use petrol or other flammable liquids near this boiler.**
  Doing so may result in fire or explosion.
- **Do not place combustibles, such as newspapers or laundry, near the boiler or flue system.**
  Doing so may result in a fire.
- **Do not place or use hair sprays, spray paints, or any other compressed gases near the boiler or flue system, including the flue termination.**
  Doing so may result in fire or explosion.
- **Do not operate the boiler with the front cover opened.**
  Doing so may result in fire or carbon monoxide (CO) poisoning, which may result in property damage or personal injury.
- **Do not operate this boiler without proper flue system.**
  Doing so may result in fire or carbon monoxide (CO) poisoning, which may result in property damage or personal injury.
- **Do not touch the power cord or internal components of the boiler with wet hands.**
  Doing so may result in electric shock.

⚠ WARNING

This appliance is intended for use by individuals with reduced physical, sensory or mental capabilities, or those lacking experience and knowledge, only under supervision and with appropriate instruction. Cleaning and maintenance should only be carried out by suitably qualified personnel.

CAUTION

- **Do not turn on the boiler unless the water and oil supplies are fully opened.**
  Doing so may damage the boiler.
- **Do not turn on the water if the cold water supply shut-off valve is closed.**
  Doing so may damage the boiler.
- **Do not use this boiler for anything other than its intended purpose, as described in this manual.**
- **Do not remove the front cover unless the power to the boiler is turned off or disconnected.**
  Failure to do so may result in electric shock.
- **When servicing the controls, label all wires prior to disconnecting them.**
  Failure to do so may result in wiring errors, which can lead to improper or dangerous operation. Verify proper operation after servicing.
- **Do not use unapproved replacement or accessory parts.**
  Doing so may result in improper or dangerous operation and will void the manufacturer's warranty.
- **Do not place anything in or around the flue terminals, such as a clothes line, that could obstruct the air flow in or out of the boiler.**

DANGER



To prevent burns:

- Use the lowest operating temperature setting necessary to provide comfortably hot water.
- If your household has children or elderly or disabled residents, consider using a lower temperature setting.
- Read all the instructions in this manual carefully before changing the temperature setting.
- Feel the water before using it on children, the elderly, or the disabled. Extinguish any naked flames.

DANGER

This boiler's water temperature is set to 49°C at the factory for your safety and comfort. Increasing the temperature increases the risk of accidental scalding. Water temperatures at or above 52°C can cause instant scalding or severe burns. Before you decide to change the temperature setting, read the following charts carefully.

Water Temperature	Time in which a young child can suffer a full thickness (3rd degree) burn
70°C	Less than 1 second
60°C	1 second
55°C	10 seconds
49°C	10 minutes
37°C	Very low scald risk

General Installation Guidelines

Navien ensures that this product contains no harmful substances and that no harmful materials have been used in its manufacture.

Current legislation must be taken into account on installing this appliance, and it must be installed in a place with suitable ventilation.

The boiler must be installed by an OFTEC registered installer.

The current building regulations must be observed on installing the boiler.

- The Technical Building Code.
- The Regulation for Heating Installations in Building.
- The Low Voltage Regulation.

Complying with the building regulations

This heating appliance forms part of the controlled services for the building. It is law that all controlled services for buildings must comply with building regulations. You must be able to satisfy your Local Authority Building Control Body (LABC) that the work carried out concerning the installation and commissioning of this heating appliance has been carried out to a satisfactory standard.

OFTEC operates a competent persons scheme and registered installers are able to certify that their work complies with building regulations.

Under the scheme:

- OFTEC must be informed about every installation.
- OFTEC will issue a building regulations compliance certificate to the householder and will notify the LABC.

OFTEC provide controlled document forms CD10 and CD11 for use during installation and commissioning respectively.

Other organisations operate self-certification schemes, e.g., NAPIT and BESCA Ltd., and it may be possible for installers who are members of these organisations to self-certify their work.

You must submit a building control notice to the LABC before installing any boiler. The LABC will then arrange regular inspection visits during the work to ensure that the installation complies with the regulations.

Installation

Failure to install appliances correctly could lead to prosecution.

The appliance should be installed by a competent person. The person installing the appliance should be aware of the Health and Safety at Work Act and take appropriate action to ensure that the regulations are adhered to. In order to give optimum efficiency and trouble free operation the appliance must be commissioned by a qualified OFTEC engineer.

Compliance with a British Standard does not, in itself, confer immunity from legal obligations. In particular, the installation of this appliance must be in accordance with the relevant requirements of the following British Standards and regulations in respect of the safe installation of equipment:

Standard	Description
BS 5410	part 1: Code of practice for Oil Fired Boilers.
BS 799	part 5: Specification for Oil Storage Tanks.
BS 7593	Code of Practice for treatment of water in domestic hot water central heating systems.
BS 5449	part 1: Specification for forced circulation hot water central heating for domestic premises.
BS 5955	part 8: Specification for the installation of thermoplastic pipes and associated fittings for use in domestic hot and cold water services and heating systems.
BS 7291	Thermoplastic pipes and associated fittings for hot and cold water for domestic purposes and heating installations in buildings.
BS 7074	part 1: Application, selection and installation of expansion vessels and ancillary equipment for sealed water systems.
BS 1254-2	Copper and copper alloys plumbing fittings part 2: Fittings with compression ends for use with copper tubes.
BS 7671	IEE Wiring Regulations, current edition.
BS 1362	Specification for general purpose fuse links for domestic and similar purposes.

The Building Regulations Part G, Part J and L1, England and Wales; Part F and Part J Section III, Scotland; Part L and Part F, Northern Ireland. Local water company by laws. The Control of Pollution (Oil) Regulations. OFTEC Standards.

Where no specific instruction is given, reference should be made to the relevant codes of practice.

EC Conformity Declaration

CE
1015

2. About the Boiler

2.1 Items Included

When you open the box, you will find the following items with the boiler. Check the box for each of the following items before installing the boiler. If it seems like there is a problem, do not use the boiler. Contact your supplier. Keep the included items out of the reach of children, as they can be dangerous. When you no longer wish to use the boiler, disable any parts that could be potentially hazardous.

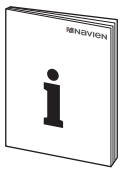	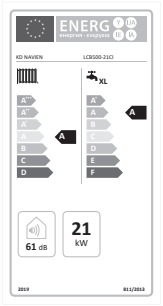	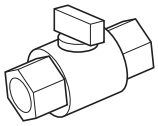	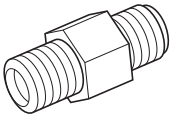
Installation & Operation Manual	ErP Label	Oil Line Cut Off Valve	Oil Line Nipple
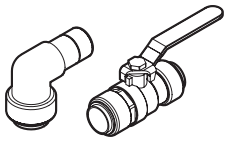	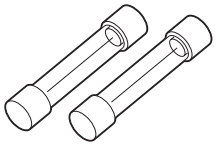	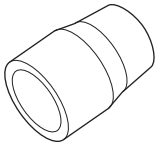	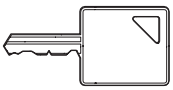
Pre-plumbing Kit	Fuse	Reducer (34 kW)	Key (External Model)
			
Dust Cap for Automatic Air Vent	Wind Deflector		

2.2 Accessories

The following optional accessories are available for the boiler.

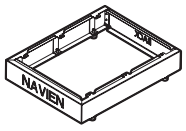	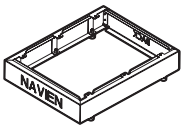	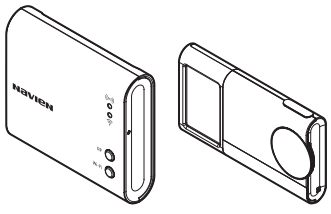	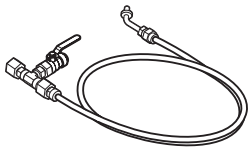
Plinth (Internal Model) (Height: Max. 140 mm)	Plinth (External Model) (Height: Max. 140 mm)	Smart Room Controller (Smart Plus)	Oil Pump Pressure Gauge Port

2.3 Service Tool

The following special tools are required for boiler service.

Component	T-handle socket wrench size	Part
Burner	13 mm	Nuts, 3 ea
Combustion Chamber	10 mm	Bolts, 4 ea

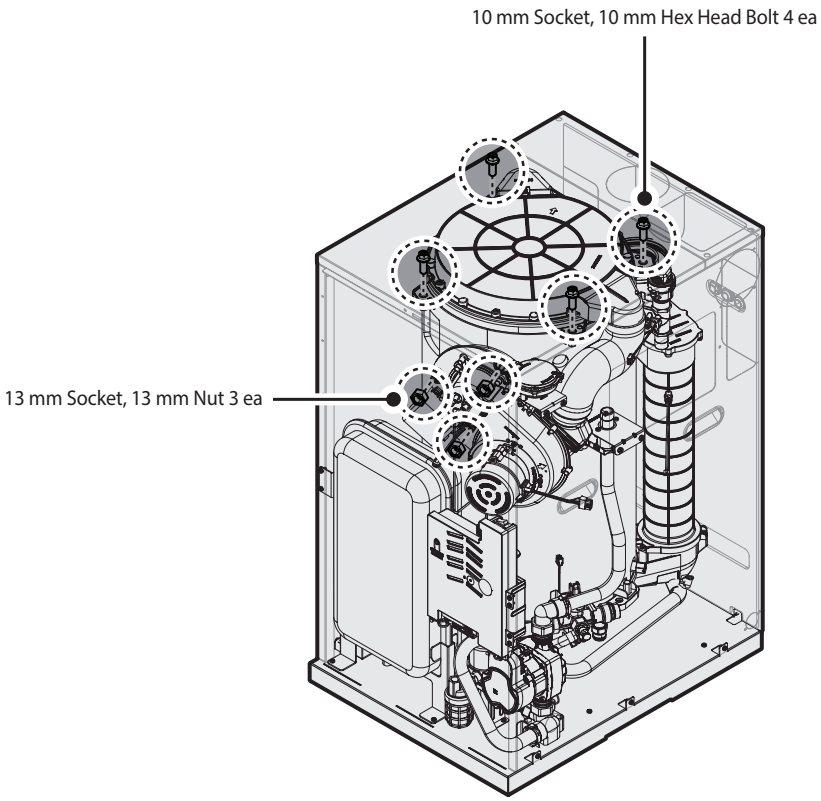

2.4 Specifications

The following tables list the general specifications and energy consumption for the boiler.

Description (Kerosene)			Unit	Internal model			External model		
				21RI 21SI 21CI	26RI 26SI 26CI	34RI 34SI 34CI	21RX 21SX 21CX	26RX 26SX 26CX	34RX 34SX 34CX
Heat input	Min/Max		kW	17/23	21/28	31/36	17/23	21/28	31/36
Heat output 80/60°C	Min/Max		kW	16/21	20/26	26/34	16/21	20/26	26/34
Heat output 50/30°C	Max		kW	22.5	27.9	36.4	22.5	27.9	36.4
Water capacity			ℓ	16.7	20.2	20.2	16.7	20.2	20.2
Central heating	Flow rate (Δt 20°C)		ℓ/min	15	18.6	24	15	18.6	24
	Waterside resistance (Δt 20°C)		mbar	130	200	220	130	200	220
	Max. operation pressure		bar	2.5					
	Supply temp. control range		°C	40 – 85 (Default 85)					
Domestic hot water (only Combi model)	Max. operation pressure		bar	10					
	Supply temp. control range		°C	30 – 60 (Default 50)			30 – 60 (Default 50)		
Connection	Heating	supply	㎜	Ø22					
		return	㎜	Ø22					
	DHW (Domestic Hot Water) outlet		㎜	Ø15					
	DCW (Domestic Cold Water) inlet		㎜	Ø15					
	Oil		inch	1/4 BSP Male					
	Flue system	Flue size	m	Coaxial Ø100/60 (plastic)					
		Max. horizontal length	m	20					
		Max. vertical length	m	21					
		90˚ elbow length	m	1.3					
		45˚ elbow length	m	1					
Electrical	Power supply		V/Hz	AC 230 V/50 Hz					
	Fuse		A	250 V (Ø5×20), 5 A/3.15 A					
	Consumption		W	85	96	118	85	96	118
	Circulation pump		W	60	60	60	60	60	60
Thermostats	Safety shut off		°C	95			95		
Sealed system	System pre-charged pressure		bar	1					
	Maximum operating pressure		bar	2.5					
	Expansion vessel (System/Combi Model)		Liters	12					
General data	Dimensions (D×W×H)	Regular/System models	mm	600×470×860			746×510×938		
		Combi models	mm	600×600×860			746×640×938		
	Weight (NET)	Combi models	kg	78	86	86	91	100	100
		System models	kg	66	74	74	70	88	88
		Regular models	kg	58	66	66	70	80	80

Product Datasheet On Energy Consumption

The following product data complies with the requirements of EU Regulations No. 811/2013 and No. 812/2013 as supplement to the Directive 2010/30/EU.

Product data	Symbol	Unit	LCB500		
			21RI, RX 21SI, SX 21CI, CX	26RI, RX 26SI, SX 26CI, CX	34RI, RX 34SI, SX 34CI, CX
Condensing boiler	-	-	Yes	Yes	Yes
Low-temperature** boiler	-	-	No	No	No
B1 boiler	-	-	No	No	No
Combination heater (CI models only)	-	-	Yes	Yes	Yes
Rated heat output	P_{rated}	kW	21	26	34
Seasonal space heating energy efficiency	η_S	%	92	92	92
Energy efficiency class	-	-	A	A	A
Useful heat output					
At rated heat output and high temperature regime*	P_4	kW	22	27	35
At 30 % of rated heat output and low temperature regime**	P_1	kW	7.2	8.1	11.2
Useful efficiency					
At rated heat output and high temperature regime*	η_4	%	91.02	90.92	90.92
At 30 % of rated heat output and low temperature regime**	η_1	%	96.87	96.77	96.77
Auxiliary electricity consumption					
At full load	elmax	kW	0.08	0.106	0.106
At part load	elmin	kW	0.027	103.87	103.87
In standby mode	P_{SB}	kW	0.003	0.003	0.003
Other items					
Standby heat loss	P_{stby}	kW	0.117	0.129	0.129
Ignition burner power consumption	P_{ign}	kW	0	0	0
Emissions of nitrogen oxides (only gas or oil fired)	NO_x	mg/kWh	101.8	79.9	79.9
Sound power level (External Model)	L_{WA}	dB	61.8	64.8	64.8
Additional data for combination heaters					
Declared load profile	-	-	XL	XL	XL
Daily electricity consumption	Q_{elec}	kWh	0.261	0.214	0.214
Annual electricity consumption	AEC	kWh	57	47	47
Daily fuel consumption	Q_{fuel}	kWh	24.202	24.728	24.728
Annual fuel consumption	AFC	GJ	18	24.202	24.202
Water heating energy efficiency	η_{wh}	%	81	80	80
Water heating energy efficiency class	-	-	A	A	A

* High-temperature regime means 60 °C return temperature at heater inlet and 80°C feed temperature at heater outlet.
** Low temperature means for condensing boilers 30°C, for low-temperature boilers 37°C and for other heaters 50°C return temperature (at heater inlet).

Specific Precautions

Read the user's information and installation manual before the application is assembled, installed or maintained.

2.5 Components

Internal Model (Regular / System)

The following diagram shows the key components of the boiler. Component assembly diagrams and particular parts lists are included in the Appendixes.

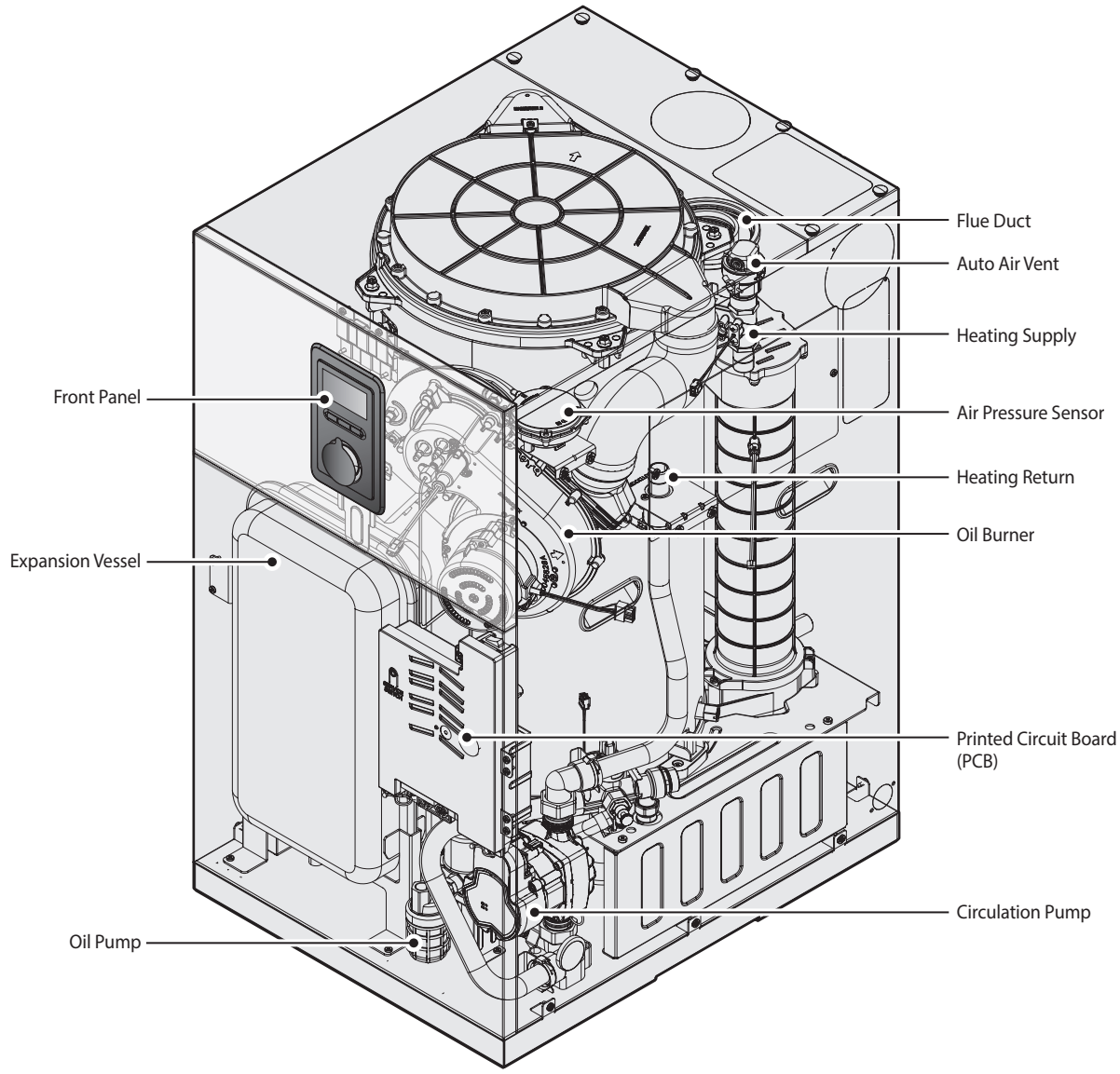

* The expansion vessel and circulation pump are not included in the regular model.

Internal Model (Combi)

The following diagram shows the key components of the boiler. Component assembly diagrams and particular parts lists are included in the Appendixes.

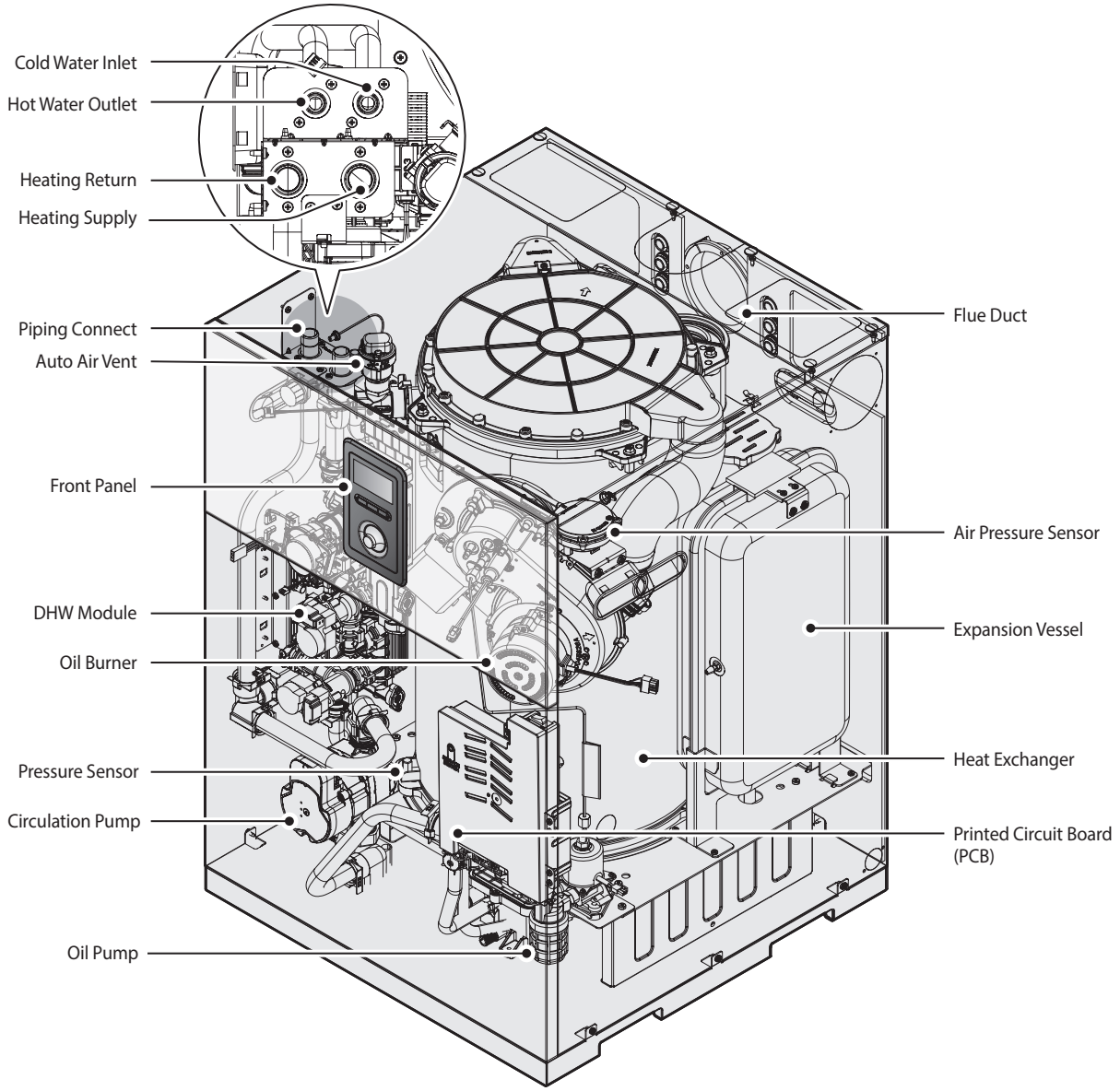

External Model (Regular / System)

The following diagram shows the key components of the boiler. Component assembly diagrams and particular parts lists are included in the Appendixes.

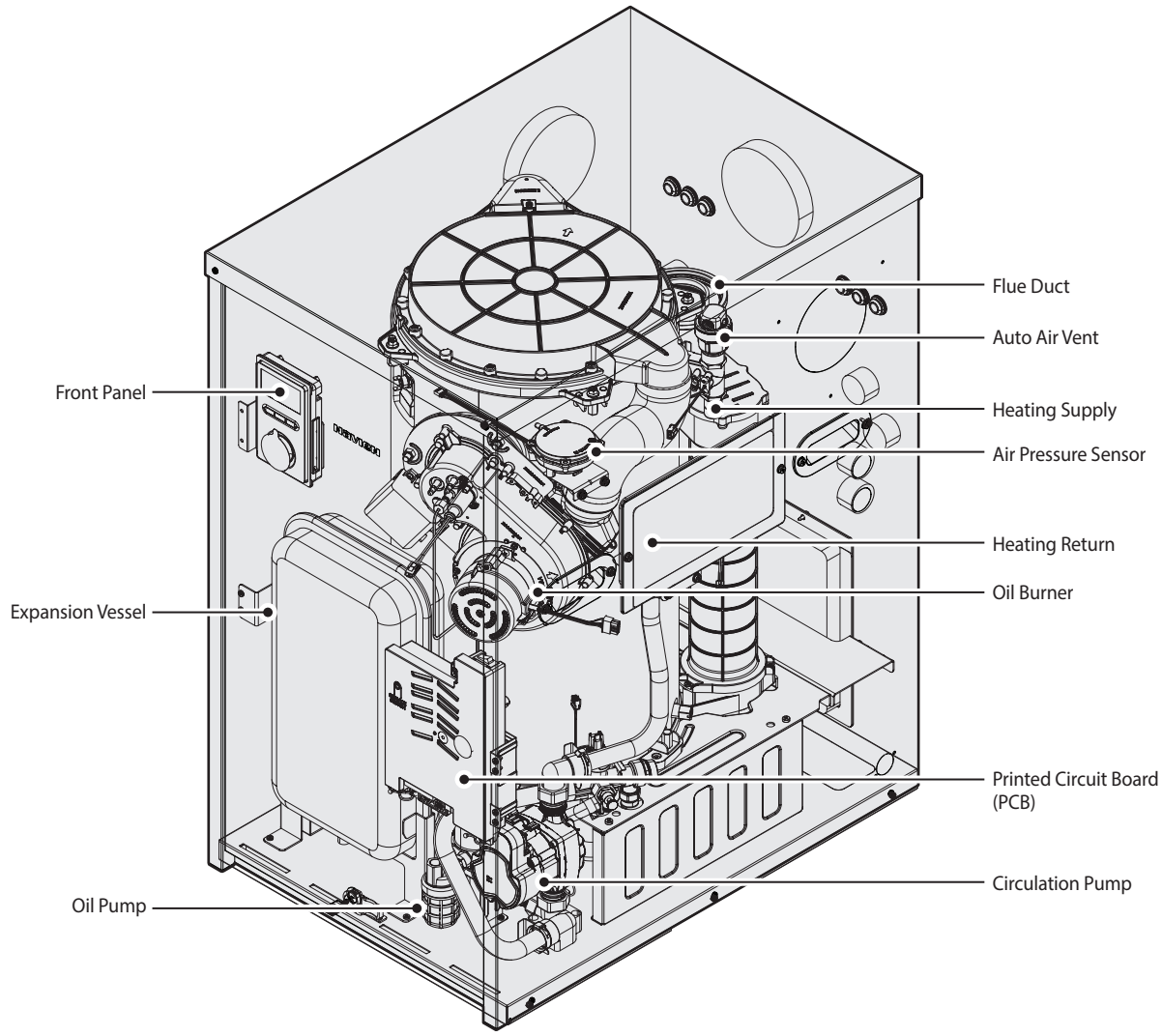

* The expansion vessel and circulation pump are not included in the regular model.

External Model (Combi)

The following diagram shows the key components of the boiler. Component assembly diagrams and particular parts lists are included in the Appendixes.

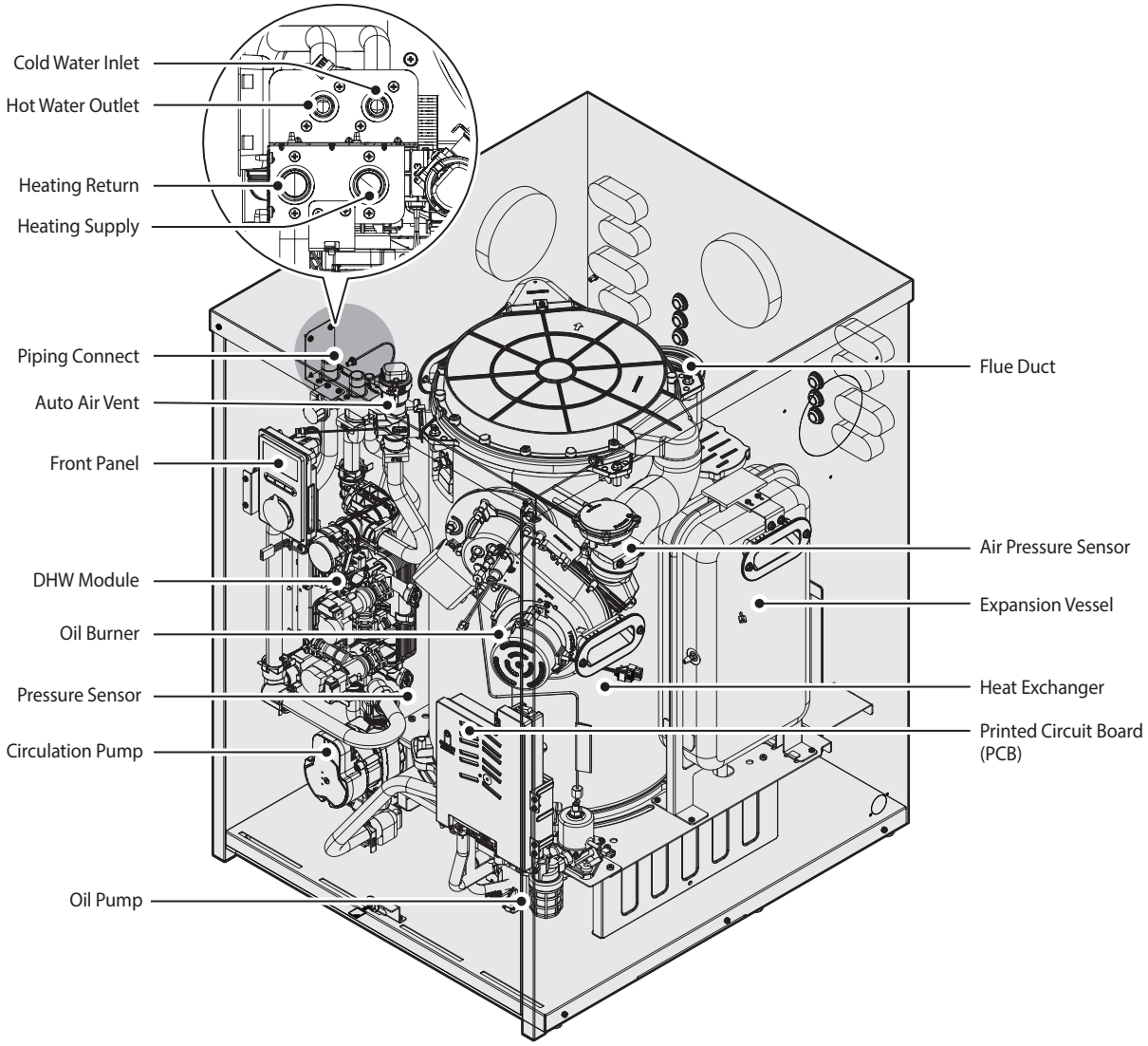

2.6 Dimensions

The following diagrams show the dimensions of the boiler and the table lists the supply connections.

Internal Model (Regular / System)

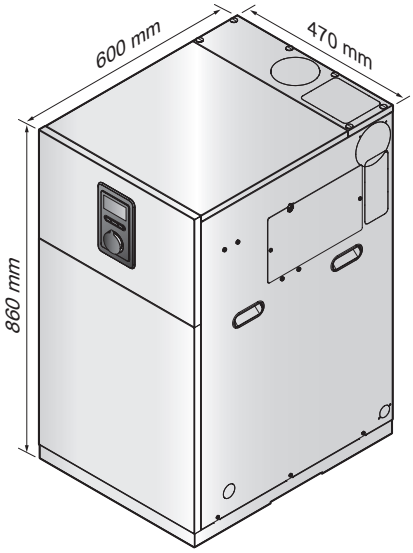

External Model (Regular / System)

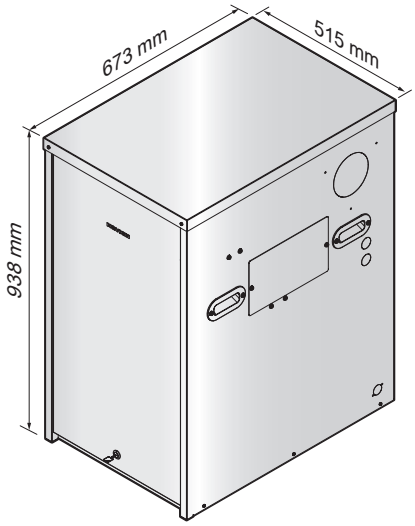

Supply Connections

Symbol	Description	LCB500		
		21SI, SX 21RI, RX	26SI, SX 26RI, RX	34SI, SX 34RI, RX
A	Flue Exhaust	Ø60/100		
B	Central Heating Supply	Ø22	Ø22	Ø22
C	Central Heating Return	Ø22	Ø22	Ø22
D	Oil Supply Inlet	¼" Ball Valve (Female)		

Top View

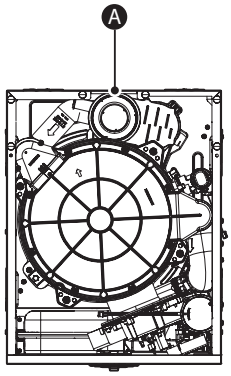

Right View

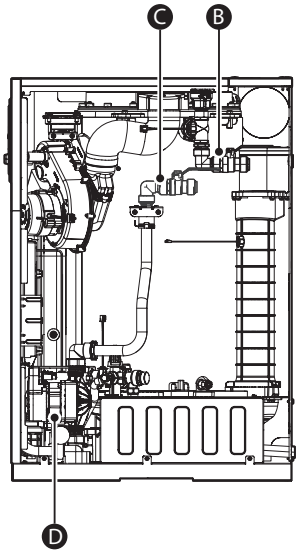

Internal Model (Regular / System)

Right View

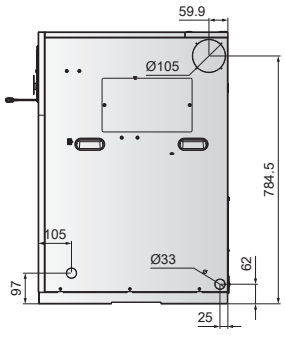

Back View

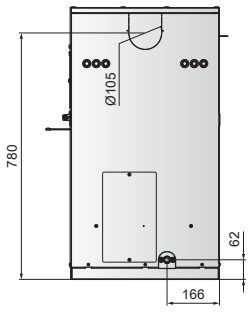

External Model (Regular / System)

Right View

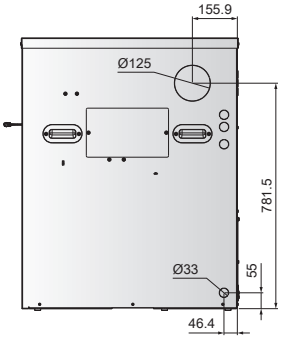

Back View

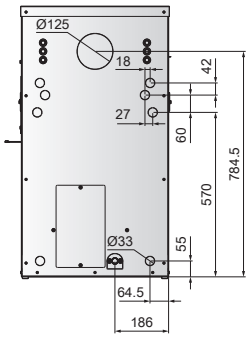

Internal Model (Combi)

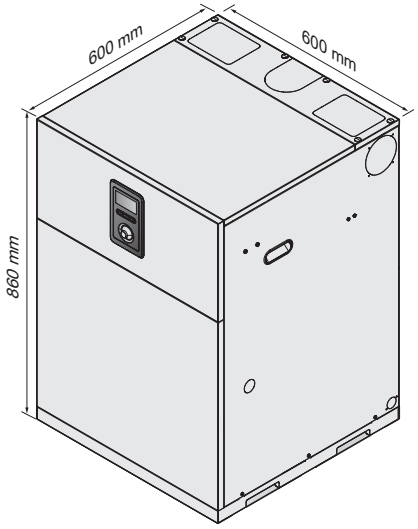

External Model (Combi)

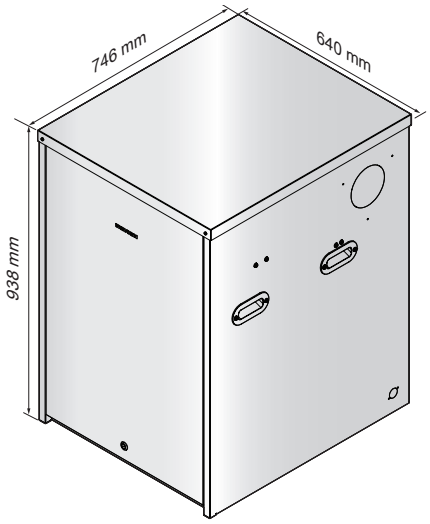

Supply Connections

Symbol	Description	LCB500		
		21CI, CX	26CI, CX	34CI, CX
A	Flue Exhaust	Ø60/100		
B	Central Heating Supply	Ø22	Ø22	Ø22
C	Central Heating Return	Ø22	Ø22	Ø22
D	DCW Inlet	Ø15 (Brass Connection)		
E	DHW Outlet			
F	Oil Supply Inlet	¼" Ball Valve (Female)		

Top View

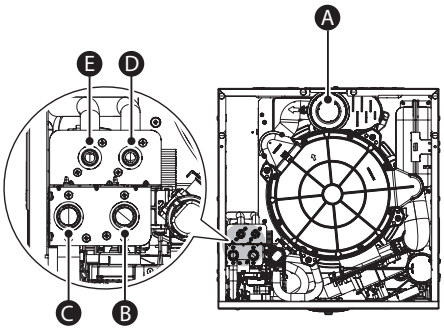

Internal Model (Combi)

Right View

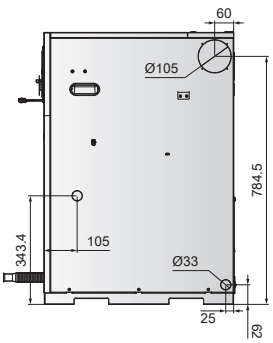

Back View

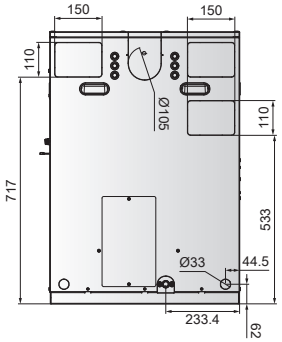

External Model (Combi)

Right View

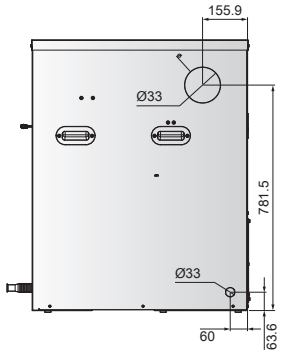

Back View

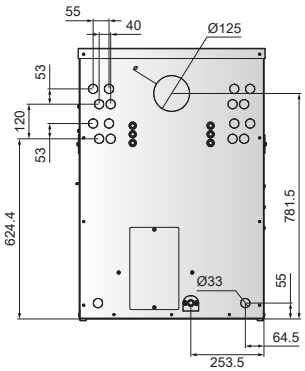

3. Installing the Boiler

3.1 Installation Procedure

The flow diagram below provides a step-by-step description of the recommended procedure for clear, easy installation of the LCB500 boiler in its final location. Refer to the Installation Manual for detailed descriptions of each step.

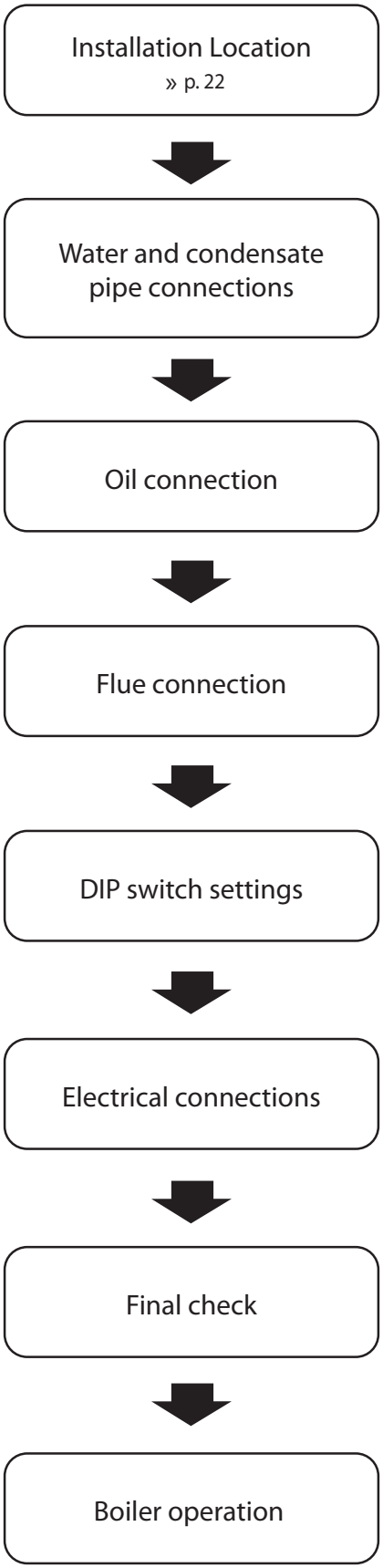

3.2 Choosing an Installation Location

When choosing an installation location, you must ensure that the location provides adequate clearance for the boiler, adequate venting and drainage options, and sufficient access to fuel, water, and electrical supplies.

Carefully consider the following factors when choosing an installation location.

Compliance Requirements

This boiler must be installed by qualified personnel in compliance with the applicable Laws and Regulations. In general, these Laws and Regulations are the Heating, Air Conditioning and Domestic Water Installation Regulation and all other local regulations.

Access to Utilities

The installation should be within a visible and accessible distance of utilities such as water, fuel and electricity.

Humidity and Contact with Water

When installing the boiler, avoid places with excessive humidity. The boiler has electric ignition components. Water spray or droppings can get inside the boiler and damage the ignition system. The boiler must be installed in a way to ensure that the ignition system components are protected from water (dripping, spraying, rain, etc.) during operation and service.

Proximity to Fixtures and Appliances

Install the boiler near fixtures that deliver or use hot water, such as bathroom, kitchen, and laundry room taps. Select a location that minimises the water piping required between major fixtures. If the distances are long or if the user requires "instant" hot water, installation of a recirculation line which circulates domestic hot water back to the boiler from the furthest fixture is recommended. Insulate as much of the hot water supply and recirculation lines as possible. For more information about the water supply, refer to "Installing a System Application" in the Installation Manual.

Adequate Drainage

The boiler produces a significant amount of condensate during operation. The boiler should be located near a suitable drain and where damage from a possible leak will be minimal. Installing the boiler in a location without a drain will void the warranty and Navien will not be responsible for water damages that occur as a result. For more information about condensate drainage, refer to "Connecting the Condensate Drain Line" in the Installation Manual.

The boiler must be located in an area where leakage of the unit or connections will not result in damage to the area adjacent to the appliance or to lower floors of the structure. When such locations cannot be found, installation of an adequately drained drain pan under the boiler is highly recommended. When installing the drain pan, ensure that the installation does not restrict combustion air flow.

Adequate Flue and Ventilation

The boiler must be located so that the grilles of the ventilation are not obstructed and normal boiler maintenance is possible even if installed between fixtures and fittings.

Select a location that requires minimal flue. Consider flue restrictions caused by windows, doors, air intakes, foliage, and other buildings. For more information about flue system, refer to "Flue System" in the Installation Manual.

To ensure adequate flue and ventilation, follow these guidelines:

- Maintain proper clearances from any openings in the building.
- Install the boiler with a minimum clearance of 300 mm above an exterior grade or as required by local codes.
- Do not enclose the flue termination.
- Install the exhaust flue in an area that is free from any obstructions, where the exhaust will not accumulate.
- Do not install the boiler where moisture from the exhaust may discolor or damage walls.
- Do not install the boiler in bathrooms, bedrooms, or any other occupied rooms that are normally kept closed or not adequately ventilated.

The requirements and recommendations stipulated in the Regulation for Heating Installations in Buildings (RITE) and any other applicable legislation in this field must be observed.

Adequate Installation Clearances

> **CAUTION**
>
> Do not install the boiler on carpeted floors.

Install the boiler in an area that allows for service and maintenance access to utility connections, piping, filters, and traps. Based on the installation location, ensure that the following clearances are maintained:

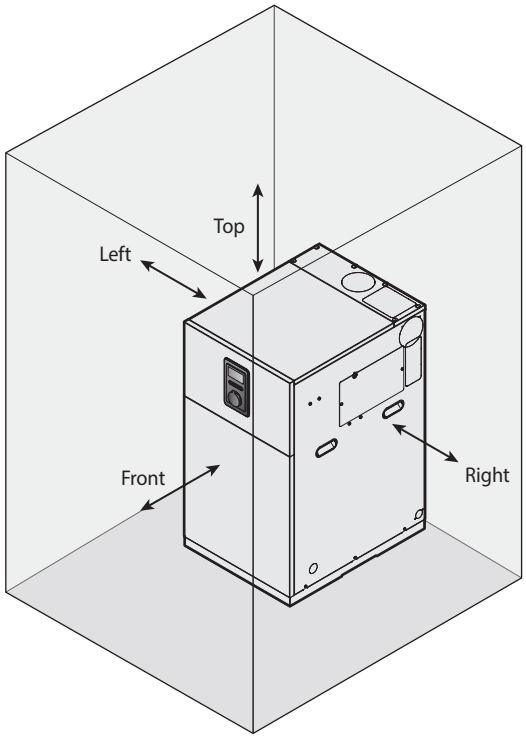

Position	Maintenance and Repair Clearances
Top	300 mm
Left	10 mm
Right	10 mm
Front	600 mm

Note

- A removable section of worktop above the boiler is required to provide access for heat exchanger servicing.
- Maintain proper installation clearances based on the installation site condition.

Clean, Debris and Chemical-free Combustion Air

- Do not install the boiler in areas where dust and debris may accumulate or where hair sprays, spray detergents, chlorine, or similar chemicals are used.
- Do not install the boiler in areas where petrol or other flammables are used or stored.
- Ensure that combustible materials are stored away from the boiler and that hanging laundry or similar items do not obstruct access to the boiler or its flue system.

4. System Details

4.1 About the PCB

Refer to the following illustration for the PCB wiring description.

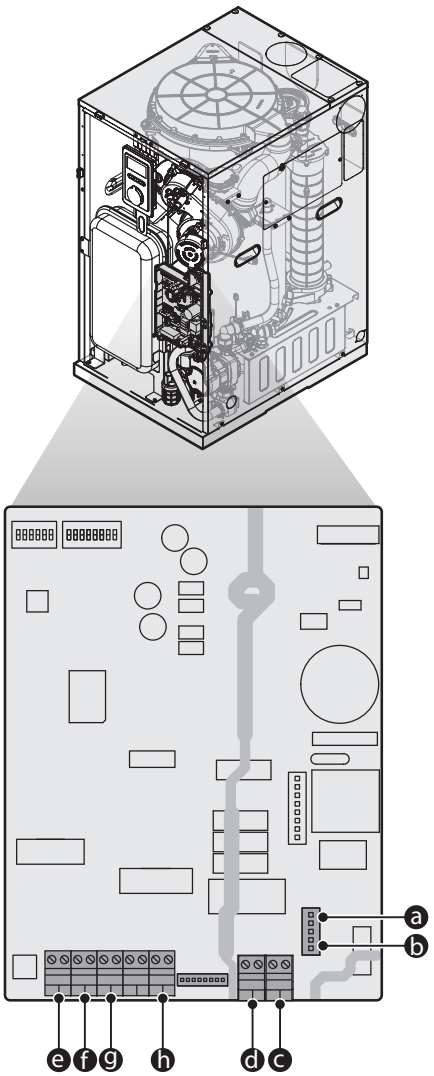

Part	Ref	Applications
AC application	a	• Combi: 3-way valve (Internal) • System/Regular: DHW valve
	b	• System/Combi: Internal recirculation pump • Regular: External recirculation pump
	c	System/Regular: CH valve
	d	Switched Live
AC application	e	OT Roomcon (OpenTherm)
	f	Cylinder stat
	g	CH stat
	h	Outdoor temperature sensor

4.2 Setting the Heating Demand

Set the heating demand on the DIW switch. To use the DHW tank, control the panel for DHW settings.

4.2.1 CH Demand Setting

The DIP SW on the circuit board that configures source of the heat demand is listed in the following table.

Switch2	Function	Setting	
5 & 6	CH heat demand	Switched live	5-OFF, 6-OFF
		CH thermostat	5-ON, 6-OFF
		OT R/C	5-OFF, 6-ON
		Smart Plus	5-ON, 6-ON

4.2.2 DHW Tank Demand Setting (System/ Regular)

You can set the DHW tank demand on the 4-3 DHW Call Signal menu.

Item	Description
4-1 DHW Thermostat	Cylinder stat
4-2 Wiring Centre	When VCU-10R (wiring centre) is connected to the boiler

Note The 4-2 Wiring Centre menu is displayed only when the CH heat demand is set to Smart Plus and the wiring centre (VCU-10R) is connected to the boiler.

4.3 Connecting Applications - Low Voltage (DC) Application Part

These connections are low voltage DC only and 240 V AC is not to be fitted to these terminals. Doing so may damage the PCB and will not be covered under warranty.

4.3.1 Connecting the OpenTherm

The boiler is designed to be connected to an OpenTherm. The OpenTherm cables are to be connected to the CN10 in the low voltage (DC) application part.

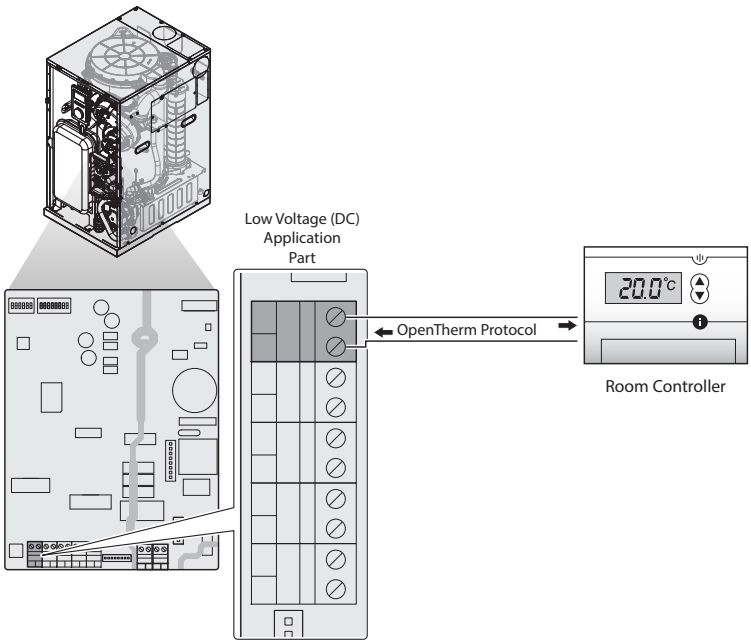

Note OpenTherm® is an industry standard modulating control available from several control manufacturers and the LCB500 boiler has an OpenTherm® interface. This enables our modulating range of OpenTherm® room controls to be connected without any further modifications.

4.3.2 Connecting the Cylinder Stat

The boiler is designed to be connected to a cylinder stat. The thermostat cables are to be connected to the CN10 in the low voltage (DC) application part.

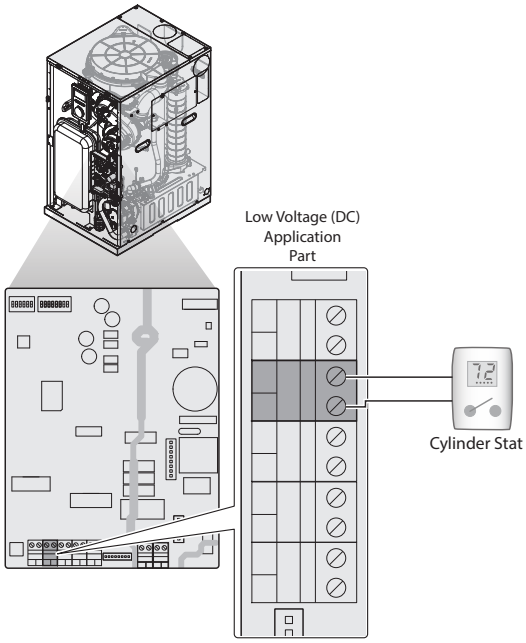

4.3.3 Connecting the CH Thermostat

The boiler is designed to be connected to a CH thermostat. The CH thermostat cables are to be connected to the CN10 in the low voltage (DC) application part.

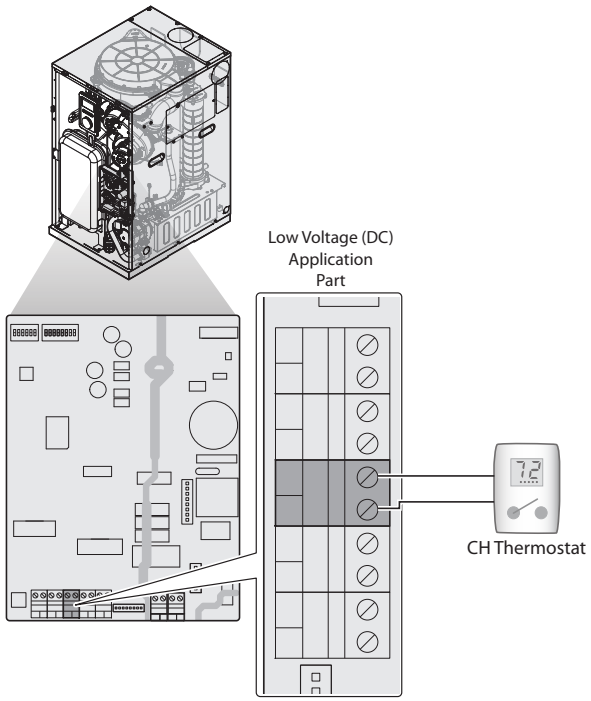

4.3.4 Connecting the Outdoor Temperature Sensor

The boiler is designed to be able to function with an outdoor temperature sensor. The sensor cables are to be connected to the CN10 in the low voltage (DC) application part.

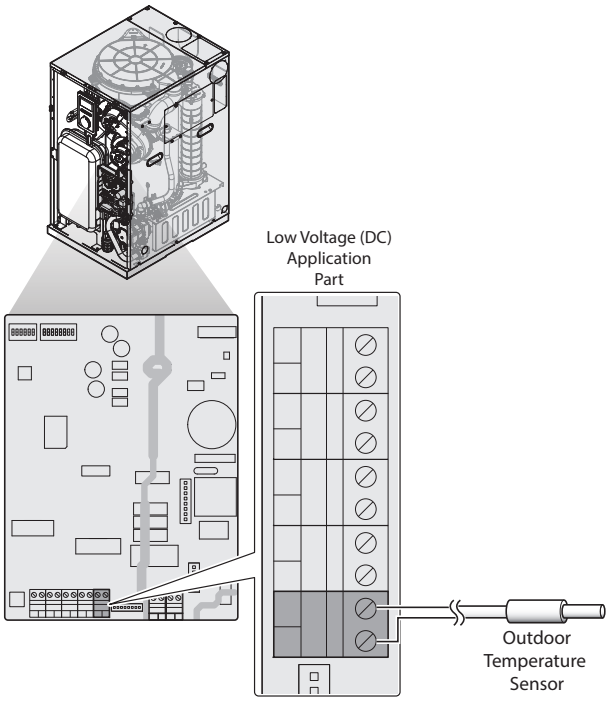

4.4 Connecting Applications to the AC Application Part

4.4.1 Connecting the 2 Port Diverter Valve (CH)

The boiler is designed to be connected to a 2 port diverter valve (CH). The valve cables are connected to the terminals 1 (L) and 2 (N) of the CN12 in the AC application part. It only operates when there is an operating signal from the CH thermostat.

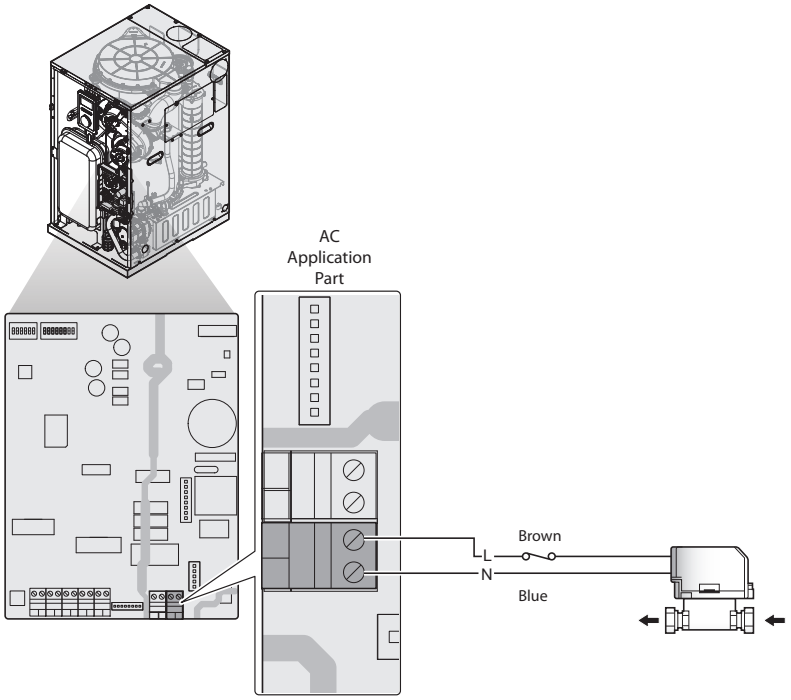

4.4.2 Connecting the 2 Port Diverter Valve (DHW)

The boiler is designed to be connected to a 2 port diverter valve (DHW). The valve cables are connected to the terminals 1 (L) and 3 (N) of the CN9 in the AC application part. It only operates when there is an operating signal from the cylinder stat.

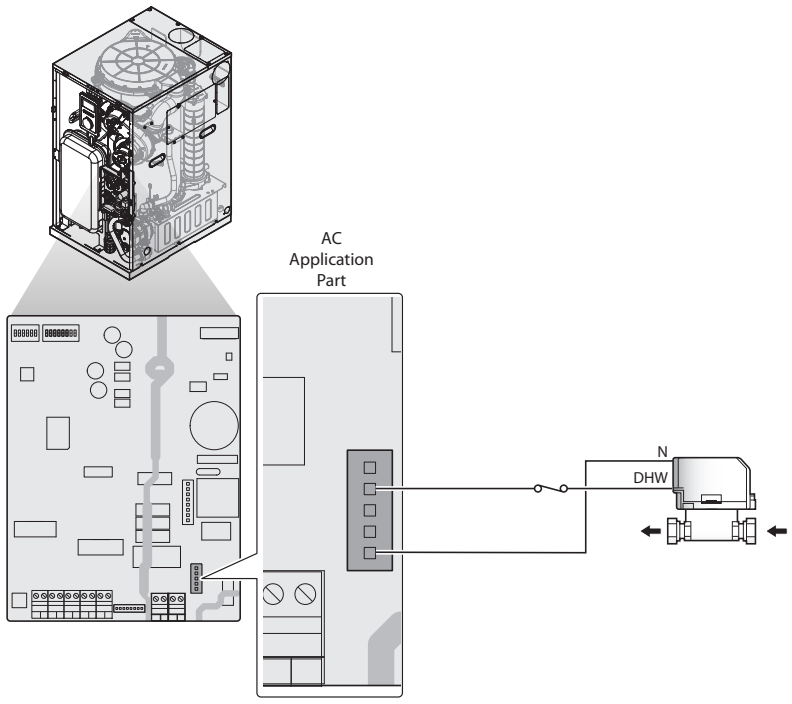

4.4.3 Connecting the 3 Port Diverter Valve

The boiler is designed to be connected to a 3 port diverter valve. The valve cables are connected to the terminals 1 (L) and 2 (N) of the CN12 in the AC application part. It only operates when there is an operating signal from the cylinder stat or CH thermostat.

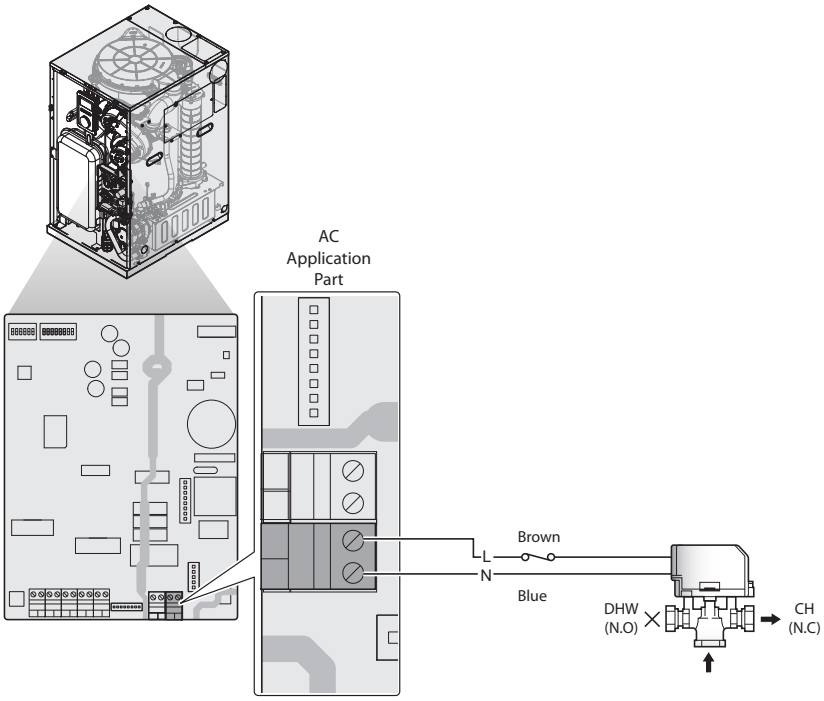

4.4.4 Connecting the 3 Way Valve (Type C Contact)

The boiler is designed to be connected to a 3 way valve (Type C Contact). The valve cables are connected to the terminals DHW, CH and N of the CN9 in the AC application part. It only operates when there is an operating signal from the cylinder stat or CH thermostat.

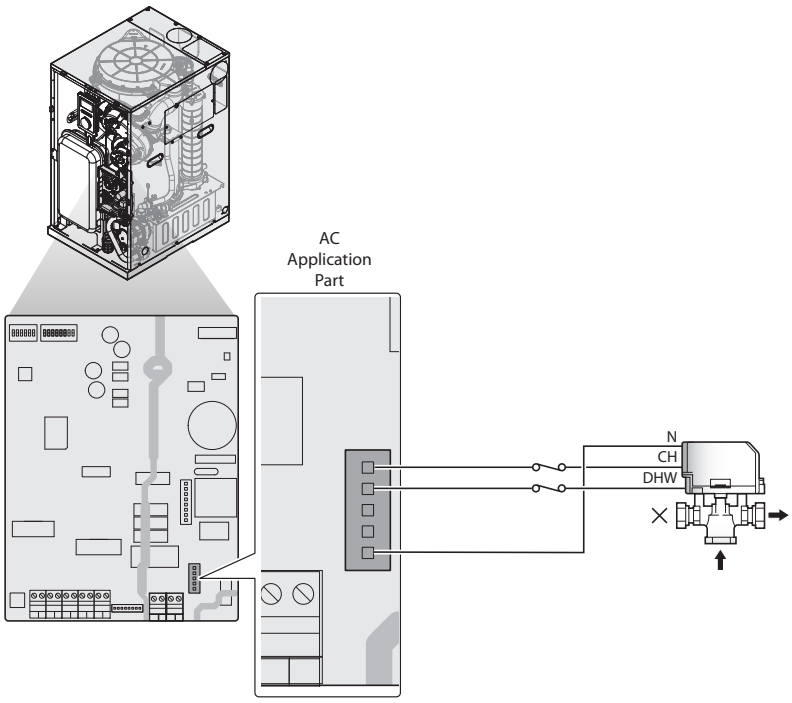

4.5 Setting the DIP Switches

> **CAUTION**
>
> **Do not remove the front cover unless the power to the boiler is turned off or disconnected.** Failure to do so may result in electric shock.

The boiler has 2 sets of DIP switches on the PCB and 2 sets of DIP switches on the front panel. DIP switches are used to control the functionality of the boiler. Set the DIP switches appropriately, based on the installation environment.

Note To access the PCB, refer to "Accessing the PCB" in the Installation Manual.

4.5.1 PCB DIP Switches

DIP Switch 1 (Set of 8)

The DIP SW 1 on the circuit board configures operation status, and boiler model/capacity.

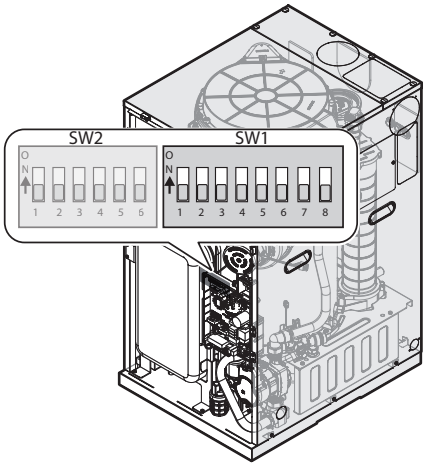

Switch 1	Function	Setting	
1 & 2	Operation status	Normal (Default)	1-OFF, 2-OFF
		Stage 1 (Min)	1-OFF, 2-ON 1-ON, 2-ON
		Stage 2 (Max)	1-ON, 2-OFF
3	Boiler type	Solo (System/Regular)	3-OFF
		Combi	3-ON
4	Not used	Not used	4-OFF
5 & 6	Capacity	21 kW	5-OFF, 6-OFF
		26 kW	5-ON, 6-OFF
		34 kW	5-OFF, 6-ON
7	Not used	Not used	7-OFF
8	Not used	Not used	8-OFF

4.5.2 Front Panel DIP Switches

DIP Switch (Set of 6)

The DIP SW 2 on the circuit board configures the fuel selection, country, makeup water method, and source of the heat demand.

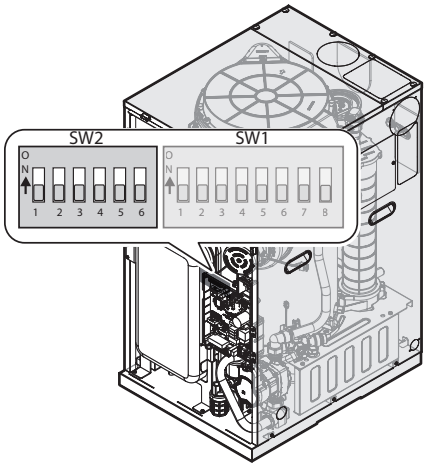

Switch 2	Function	Setting	
1 & 2	Fuel type	Kerosene	1-OFF, 2-OFF
		HVO	1-OFF, 2-ON
3	Not used	Not used	3-OFF
4	Not used	Not used	4-OFF
5 & 6	CH heat demand	Switched live	5-OFF, 6-OFF
		CH thermostat	5-ON, 6-OFF
		OT R/C	5-OFF, 6-ON
		Smart Room Controller (Smart Plus)	5-ON, 6-ON

4.6 Front Panel

4.6.1 Using the Front Panel

The front panel allows you to adjust the temperature and view the operating status or error codes. Remove the protective film from the front panel before using it.

4.6.1.1 Icons and Digital Display

The icons and digital display on the front panel provide important information required for the boiler's operation. Refer to the following table for detailed information.

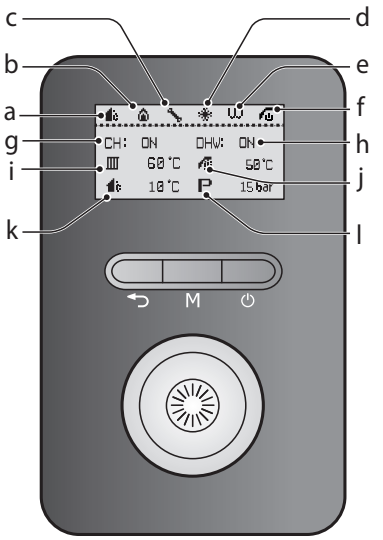

a		**Outdoor temperature compensation (OTC)** Displayed when the outdoor temperature compensation (OTC) is enabled.	**b**		**Combustion** Displayed when the burner is combusting.
c		**System fault** Displayed when a system fault is detected.	**d**		**Frost protection** Displayed when the boiler is operating in anti-freeze mode.
e		**Schedule programming mode** Displayed when the boiler's schedule programming operation is set.	**f**		**DHW preheat** Displayed when the DHW preheat feature is enabled. (Combi Model Only)  Always On  Weekly  Intelligent
g		**Central heating demand** Indicates the central heating demand is present.	**h**		**DHW demand** Indicates that DHW demand is present.
i		**Central heating set temperature** When the central heating temperature is set: Displays the currently set central heating temperature. When the central heating temperature is not set: Displays the current supply water temperature.	**j**		**DHW set temperature** When the DHW temperature is set: Displays the currently set DHW temperature. When the DHW temperature is not set: Displays the current supply water temperature when using the DHW thermostat. Displays the current DHW tank temperature when using the DHW sensor.
k		**Outdoor temperature** Displays the outdoor temperature.	**l**		**System pressure** Displays the internal water pressure of the boiler system.

4.6.1.2 Buttons and Command Dial

Using the buttons and the Command dial on the front panel, you can turn on or off the boiler, monitor the current operation status, and set the values required for the boiler's operation, such as central heating and DHW supply temperatures. Refer to the following table for detailed information.

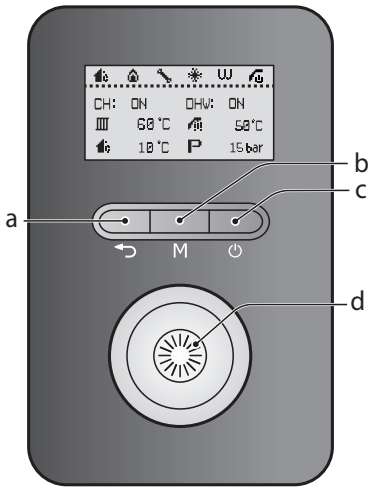

a	⮌	**Back button** Return to the previous menu or screen.	b	M	**Mode button** Enter the boiler's main menu.
c	⏻	**Power button** Press and hold for at least 3 seconds to turn on or off the boiler.	d	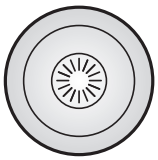	**Command dial** Rotate to switch between menu items, or to increase/decrease values. Press to make a selection or to confirm changes.

4.6.2 Turning the Boiler On or Off

To turn the boiler on or off, press the Power button (⏻) for 1 second.

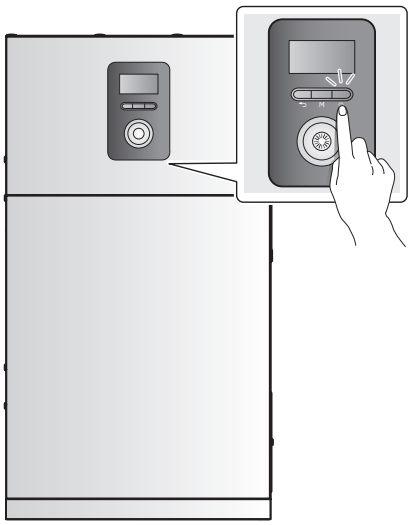

When the power is on, the boiler automatically enters normal operation mode, and the boiler's operating conditions are displayed on the screen.

Note

- The boiler status icons remain displayed when the boiler is turned off.
- To prevent formation of soot, the minimum running time of the burner in the boiler is 2 minutes and 30 seconds. Therefore, if you turn off the boiler within 2 minutes and 30 seconds of it being turned on, the burner does not stop running immediately.

4.6.3 Adjusting the Temperature

4.6.3.1 Adjusting the Central Heating Temperature

To adjust the heating temperature:

1. In normal operation mode, rotate the Command dial (◎) . The central heating temperature (▥) is highlighted on the screen.

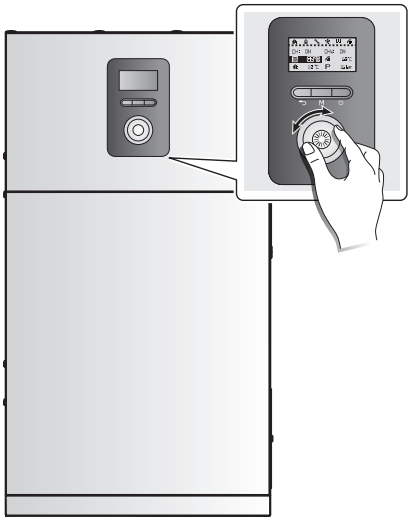

2. Press the Command dial (◎) to select the central heating temperature (▥). The highlighted section will flash.



3. Rotate the Command dial (◎) to the right or left to increase or decrease the temperature.
4. Press the Command dial (◎) to confirm the new temperature.
5. Press the Back button (⮌) to return to normal operation mode, or rotate the Command dial (◎) to adjust other operation conditions.

You can adjust the temperature while the highlighted section is flashing. Once the flashing stops, the current temperature setting is stored.

Note

- The central heating temperature cannot be adjusted when the Outdoor Reset Control is used.
- The central heating temperature cannot be adjusted if the boiler is operating as a sub unit in a cascade system. The main unit's set temperature will be displayed on the screen.
- In case of outdoor reset sensor malfunction, the boiler will operate at this set temperature.
- Take note of the original heating temperature in case you want to restore it to the default.
- The default central heating supply water temperature range is 40°C (Absolute MIN) to 85°C (Absolute MAX).
- The default central heating return water temperature range is 30°C (Absolute MIN) to 65°C (Absolute MAX).
- You can adjust the temperature ranges in the parameter settings menu.
- The boiler will retain your settings during a power outage.

4.6.3.2 Adjusting the DHW Temperature

To adjust the water temperature:

1. In normal operation mode, rotate the Command dial (). The central heating temperature () is highlighted on the screen.

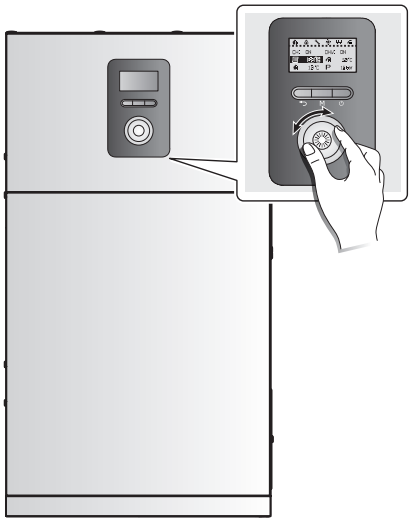

2. Rotate the Command dial () to the right to select the DHW temperature ().

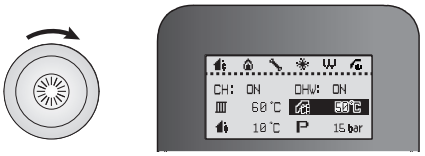

3. Press the Command dial () to select the indirect DHW temperature (). The highlighted section will flash.

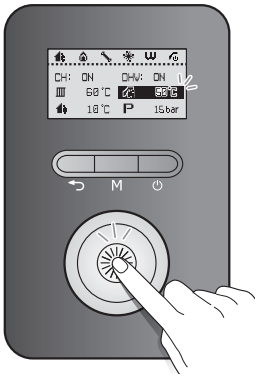

4. Rotate the Command dial () to the right or left to increase or decrease the temperature.
5. Press the Command dial () to confirm the new temperature.
6. Press the Back button () to return to normal operation mode, or rotate the Command dial () to adjust other operation conditions.

You can adjust the temperature while the display is flashing. Once the display stops flashing, the current temperature setting is stored.

Note

- Take note of the original DHW indirect supply temperature in case you want to restore it to the default.
- The default DHW temperature range is 40°C (Absolute MIN) to 85°C (Absolute MAX).
- You can adjust the temperature ranges in the parameter settings menu.
- The boiler will retain your settings during a power outage.
- System/Regular boilers: The default DHW Supply Temperature range is 40°C (Absolute Min) to 85°C (Absolute Max).
- Combi boilers: The default DHW Temp range is 30°C (Absolute Min) to 60°C (Absolute Max).

4.6.3.3 Resetting the Boiler

If an error message appears during boiler operation, reset the boiler to resolve the problem. Press the Back button (⮌) on the front panel to reset the boiler.

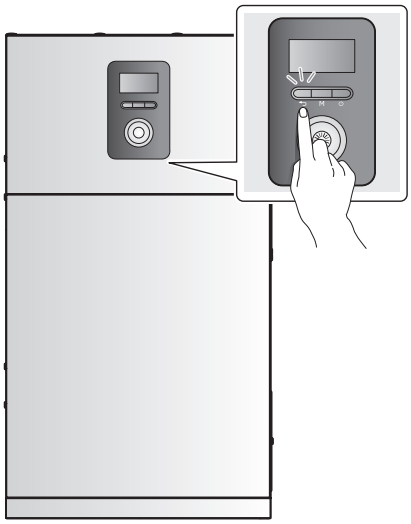

If resetting the boiler does not solve the problem, refer to the Troubleshooting section of this manual or contact Technical Support at 0844 332 2323.

4.6.4 Accessing Basic Menu Items

In the Main Menu screen, you can view the boiler's operating conditions, configure the central heating and DHW temperatures, and review error history. Press the Menu button (M) to enter the Main Menu screen.

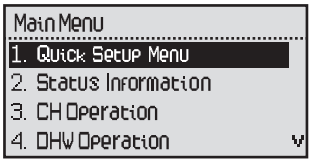

4.6.4.1 Quick Setup Menu

The Quick Setup Menu is designed to help configure the boiler settings after installation is complete. To enter the Quick Setup Menu, press the Menu button (M), and select "1.Quick Setup Menu".

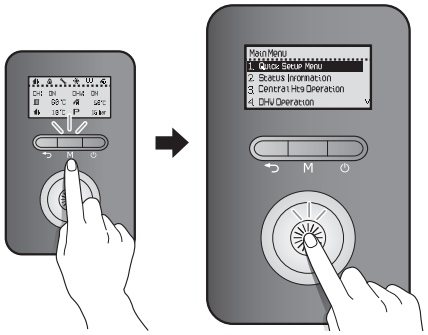

Press the Back button (⮌) to return to the previous screen.

System/Regular Models

Item	Description
1. DHW ON/OFF	Set the DHW operation.
2. Time Setting	Set the system clock (RTC). • Display format: YYYY.MM.DD/ HH:MM:SS

Combi Models

Item	Description
1. Time Setting	Set the system clock (RTC). • Display format: YYYY.MM.DD/ HH:MM:SS

4.6.4.2 Viewing Basic Information

To view information about the boiler, press the Menu button (M), and then select "2. Status Information".

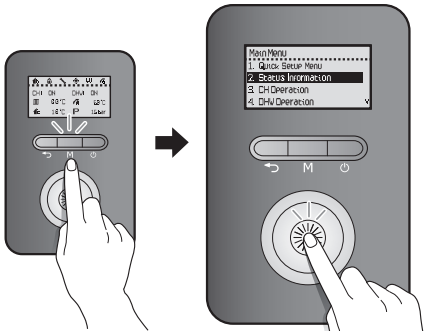

Rotate the Command dial ( ) to switch between the information items. Press the Command dial ( ) to select an item and view the information.

Press the Back button ( ) to exit information view mode.

System/Regular Models

Item	Description
1. Operation State	Current Operation State
2. Heat Capacity	Heat capacity (%)
3. CH Set Temp	Central heating set temperature (°C)
4. DHW Set Temp	DHW indirect supply set temperature (°C)
5. Supply Temp	Heating supply temperature (°C)
6. Outdoor Temp	Outdoor temperature (°C)
7. Water Pressure	Water pressure (bar)
8. Flame Value	Flame detector AD value • Flame On: 8bit AD values equal to or lower than 140 • Flame Off: 8bit AD values equal to or higher than 150
9. Fan Target RPM	Set the fan speed (RPM)
10. Fan Current RPM	Current fan speed (RPM)
11. Oil Pump Target MV	Target oil pump mv (MV)
12. Exhaust Temp	Exhaust temperature (°C)
13. OTC ON/OFF	OTC Status (Enable/Disable)
14. K-Factor Set Value	K-Factor for the OTC
15. Model	Model type
16. Type	Boiler type
17. Oil	Oil type
18. Main F/W ver	Main firmware version
19. Panel F/W Ver	Panel firmware version

Combi Models

Item	Description
1. Operation State	Current Operation State
2. Heat Capacity	Heat capacity (%)
3. CH Set Temp	Central heating set temperature (°C)
4. DHW Set Temp	DHW set temperature(°C)
5. Supply Temp	Heating supply temperature (°C)
6. Outdoor Temp	Outdoor temperature (°C)
7. Inlet Temp	Inlet temperature(°C)
8. DHW Temp	DHW temperature(°C)
9. Outlet2 Temp	DHW outlet2 temperature(°C)
10. Flow Rate	Water flow rate (LPM)
11. Flame Value	Flame detector AD value • Flame On: 8bit AD values equal to or lower than 140 • Flame Off: 8bit AD values equal to or higher than 150
12. Fan Target RPM	Set the fan speed (RPM)
13. Fan Current RPM	Current fan speed (RPM)
14. Oil Pump Target MV	Target oil pump mv (MV)
15. Exhaust Temp	Exhaust temperature (°C)
16. OTC ON/OFF	OTC Status (Enable/Disable)
17. K-Factor Set Value	K-Factor for the OTC
18. Model	Model type
19. Type	Boiler type
20. Oil	Oil type
21. Main F/W ver	Main firmware version
22. Panel F/W Ver	Panel firmware version

4.6.4.3 Setting the CH Operation

To set the boiler's central heating operation, press the Menu button (M), and then select "3. CH Operation".

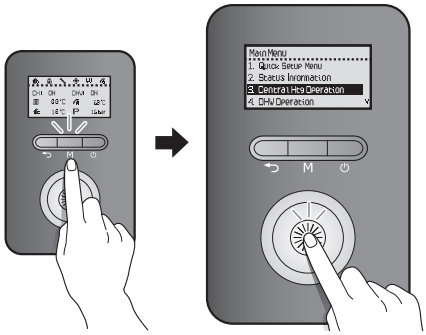

Rotate the Command dial (⊛) to switch between the list items or to increase/decrease setting values. Press the Command dial (⊛) to select an item or to confirm after making changes.

Press the Back button (⮌) to return to the previous screen or menu.

Item	Description
1. CH ON/OFF	Enable or disable central heating operation. • Setting range: Enable/Disable • Default: Enable
1-1 CH Set Temp	Set the central heating target temperature (°C) • Setting range: 40-85°C • Default: 85°C This option is available only when "1. CH ON/OFF" is set to "Enable".
2. OTC ON/OFF	Enable or disable the outdoor temperature compensation control option.
2-1 K-Factor*	K-Factor for the central heating
2-2 WWSD Temp	Set the Warm Weather Shut-down temperature. • Setting range: OFF, 10°C – 40°C • Default: OFF
2-3 WWSD On Diff	Set the differential temperature to deactivate the Warm Weather Shutdown. • Setting range: 1°C – 20°C • Default: 3°C

* When the boiler is connected to an outdoor temperature sensor (optional), functioning may be activated according to outdoor temperature conditions and K-factor values using the parameters.

The graph shows how the set temperature is determined. K-factor values can be set using the front panel or the Smart Room Controller.

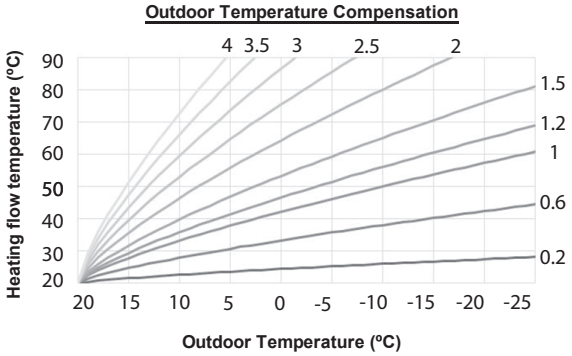

If there is an input from the outdoor temperature sensor, OTC (Outdoor Temperature Compensation) control will be enabled automatically. Also, if there is no input from the outdoor temperature sensor, OTC control will be disabled automatically.

OTC control can be enabled or disabled by the room thermostat signals. If the room thermostat is on (short), and the set supply water temperature calculated by the outdoor temperature and the K-factor values is above 30°C, OTC control is enabled. If the set supply water temperature is below 30°C, OTC control is disabled.

4.6.4.4 Setting the DHW Operation

To set the boiler's indirect (System/Regular) or direct (Combi) DHW operation, press the Menu button (M), and then select "4. DHW Operation".

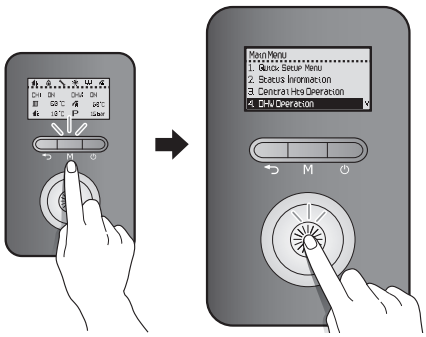

Rotate the Command dial (⊛) to switch between the list items or to increase/decrease setting values. Press the Command dial (⊛) to select an item or to confirm after making changes.

Press the Back button (⮌) to return to the previous screen or menu.

System/Regular Models

Item	Description
1. DHW ON/OFF	Set the DHW operation.
2. DHW Supply Set Temp	Set the DHW tank supply water temperature. • Setting range: 40 – 85°C • Default: 85°C
3. DHW Priority Time	DHW priority time • Range: 0 – 180 min • Default: 30 min
4. Cylinder Control	Select a device for sensing the DHW demand. 1. Cylinder Stat 2. Wiring Centre: This option is available only when CH Demand is set to Smart Plus.

Combi Models

Item	Description
1. DHW Supply Set Temp	Set the DHW tank supply water temperature. • Setting range: (DHW Set Temp + 30°C) – 85°C • Default: 85°C
2. DHW Set Temp	Set the DHW temperature. • Setting range: 30 – 60°C • Default: 50°C

* DHW Priority Time refers to the time duration that the boiler will give priority to DHW over central heating (Combi boiler only).

4.6.4.5 Setting the Schedule Programming Operation

To set the boiler's schedule programming operation, press the Menu button (M), and then select "5. Schedule Programming".

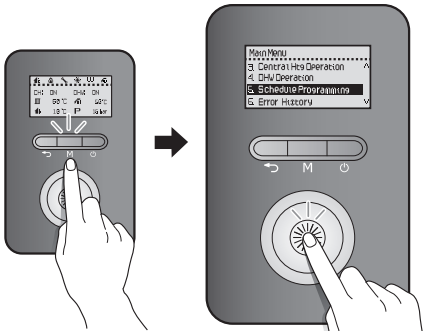

Rotate the Command dial (⊛) to switch between the list items or to increase/decrease setting values. Press the Command dial (⊛) to select an item or to confirm after making changes.

Item	Description
1. CH Schedule	Set the central heating weekly timer.
2. DHW Schedule	Set the DHW tank (System/Regular) or DHW PreHeat (Combi) Weekly Timer.
3. Schedule Check	Check the weekly schedule.

Note To select this option, you must set up the Time settings in the Configuration menu.

If you select an item, you can select the certain day to schedule the central heating or DHW modes.

System/Regular Models - Central Heating or DHW Mode

Item	Description
1. 7 Day	Schedule a command for each day of the week.
2. 5 + 2 Day	Schedule a command for weekday and weekend.
3. 5 + 1 + 1 Day	Schedule a command for weekdays, Saturdays, and Sundays.
4. OFF (Not Used)	Disable the schedule function.

Combi Models - Central Heating Mode

Item	Description
1. 7 Day	Schedule a command for each day of the week.
2. 5 + 2 Day	Schedule a command for weekday and weekend.
3. 5 + 1 + 1 Day	Schedule a command for weekdays, Saturdays, and Sundays.
4. OFF (Not Used)	Disable the schedule function.

Combi Models - DHW Mode

Item	Description
1. Always On	Preheat always ON.
2. Intelligent	The boiler analyzes your hot water consumption pattern and preheats the water when the set conditions are met.
3. Weekly	Set the DHW mode settings to be the same as space heating mode.
4. OFF (Not Used)	Disable the schedule function.

Set the Weekly Schedule

When setting up the Weekly option, select 'Weekly,' and select between 1 Day, 3 Day, and 7 Day to go to the Schedule menu.

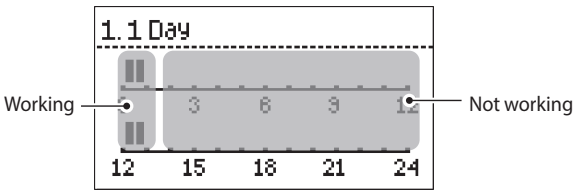

Rotate the Command dial (◎) to choose the scheduled time. You can choose the time in 30 minutes intervals.

4.6.4.6 Viewing Error History

To view the error history, press the Menu button (M), and then select "6. Error History".

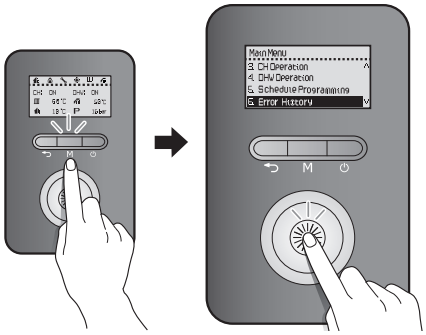

A list of 10 recent errors is displayed on the screen, with the most recent error displayed at the top of the list.

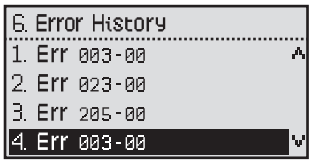

Rotate the Command dial (◎) to switch between the list of errors. Press the Command dial (◎) to select an error to view detailed information.

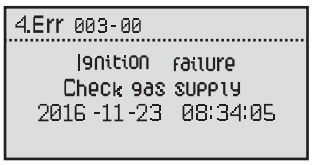

Press the Back button (↩) to return to the previous screen or menu.

Note

- The front panel display flashes in red and the error icon is displayed (flashing) when a level 1 error is detected. You can press the Command dial (◎) to enter error display mode. Boiler operation is maintained during a level 1 error.
- A level 1 error is automatically cleared when the problem is resolved.

4.6.4.7 Viewing Other System Information

To view the miscellaneous system information, press the Menu button (M), and then select "7. EMS Data".

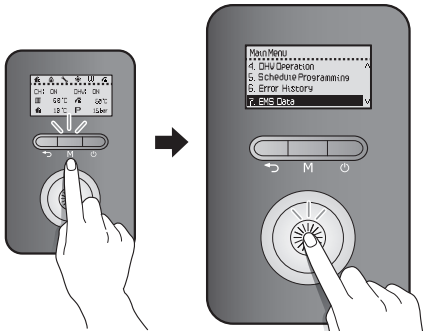

Rotate the Command dial (⊛) to switch between the information items. Press the Command dial (⊛) to select an item and view the information.

Press the Back button (⮌) to return to the previous screen or menu.

Item	Description
1. CH Operation Time	View monthly central heating operation logs.
2. DHW Operation Time	View monthly DHW operation logs.
3. Oil Consumption	View monthly oil consumption.

4.6.4.8 Setting the Display Options

To set the front panel display options, press the Menu button (M), and then select "8. Configuration".

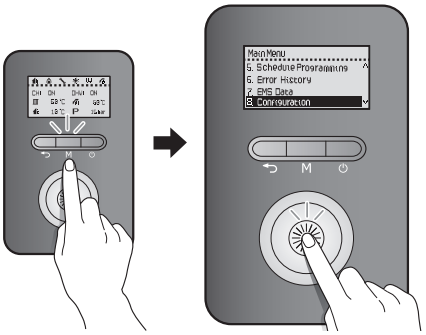

Rotate the Command dial (⊛) to switch between the list items or to increase/decrease setting values. Press the Command dial (⊛) to select an item or to confirm after making changes.

Press the Back button (⮌) to return to the previous screen or menu.

Item	Description
1. Language	Select the display language. 1. English • Default: English
2. °C/°F Setting	Select the temperature unit. 1. Celsius (°C) 2. Fahrenheit (°F) • Default: Celsius (°C)
3. PSI/BAR Setting	Select the water pressure unit. 1. PSI 2. BAR • Default: BAR
4. Time Setting	Set the system clock (RTC). • Display format: YYYY.MM.DD/ HH:MM:SS
5. Backlight Time Setting	Set the backlight time. • Setting range: 0 – 60 sec • Default: 10 sec
6. Sound Setting	Set the sound ON/OFF • Setting range: ON/OFF • Default: ON

4.6.5 Accessing Advanced Menu Items

4.6.5.1 Viewing Service Information

To view service information about the boiler, press the Back button (⮌) and the Menu button (M) simultaneously for 3 seconds, and then select "1. Service Status Info".

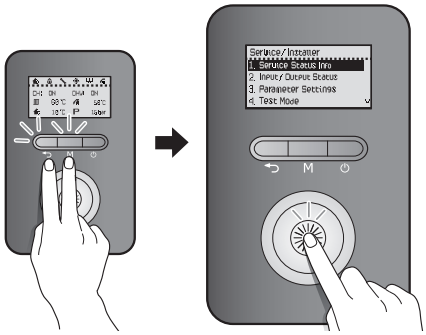

Rotate the Command dial (◎) to switch between the information items. Press the Command dial (◎) to select an item and view the information.

Press the Back button (⮌) to return to the previous screen or menu.

Item	Description
1. Elapsed Time After Install	Elapsed time since installation
2. HEX Overheat - No. of Times	Number of times the heat exchanger high limit stat has activated
3. Flame Loss - No. of Times	Number of times a flame loss/misfire has occurred
4. 2nd ignition - No. of Times	Number of second ignition attempts
5. 3rd ignition - No. of Times	Number of third ignition attempts

4.6.5.2 Viewing Input and Output Status

To view the boiler's input and output status, press the Back button (⮌) and the Menu button (M) simultaneously for 3 seconds, and then select "2. Input/Output Status".

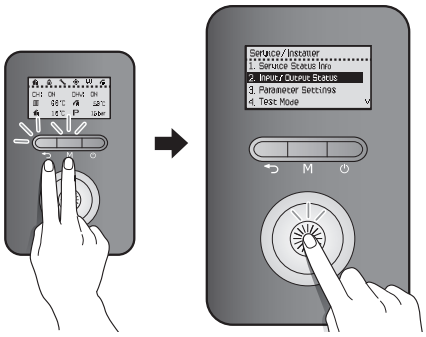

Rotate the Command dial (◎) to switch between the information items. Press the Command dial (◎) to select an item and view the information.

Press the Back button (⮌) to return to the previous screen or menu.

System/Regular Models

Item	Description
1. Switched Live Status	CH switched live input status
2. CH Thermostat Status	CH thermostat input status
3. DHW Thermostat Status	DHW thermostat input status
4. Boiler Pump Status	Boiler pump output status
5. 2 Way Valve	2 Way valve output status
6. 3 Way Valve	3 Way valve output status
7. HTL Input Status	HTL input status

Combi Models

Item	Description
1. Switched Live Status	CH switched live input status
2. CH Thermostat Status	CH thermostat input status
3. Boiler Pump Status	Boiler pump output status
4. 3 Way Valve	3 Way valve output status
5. HTL Input Status	HTL input status

4.6.5.3 Setting the Operation Parameters

To set the boiler's operation parameters, press the Back button (⮌) and the Menu button (M) simultaneously for 3 seconds, and then select "3. Parameter Settings".

> **CAUTION**
>
> Parameters must be set by a qualified professional with an extensive understanding of the boiler system. Setting parameters improperly may lead to property damage or injury.

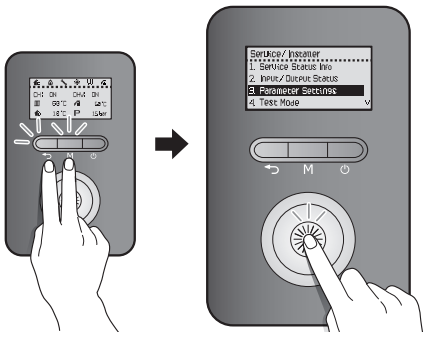

In the password screen, rotate the Command dial (◎) to change numbers and places, and press the Command dial (◎) to enter the password.

The factory default password is "1234".

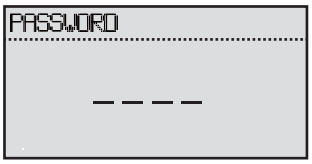

After entering the parameter setting screen, rotate the Command dial (◎) to switch between the parameters or to increase/decrease setting values. Press the Command dial (◎) to select a parameter or to confirm after making changes.

Press the Back button (⮌) to return to the previous screen or menu.

System/Regular Models

Item	Description
1. Supply MIN Set-point	Set the central heating supply minimum temperature. • Setting range: 25°C – [MAX Set-point – 20°C] • Default: 40°C
2. Supply MAX Set-point	Set the central heating supply maximum temperature. • Setting range: [MIN Set-point + 20°C] – 85°C • Default: 85°C
3. CH Burner Off Diff	Set the temperature range for turning off central heating. • Setting range : 0°C – 30°C • Default : 0°C
4. CH Burner On Diff	Set the temperature range for turning on central heating. • Setting range : 1°C – 30°C • Default : 20°C
5. Anti Fast Cycling Time*	Set the anti-fast cycling time. • Setting range: 0 – 20 min • Default: 3 min
6. Freeze protection	Set the pump freeze protection temperature. • Setting range: 6°C – 10°C • Default: 10°C **Note** The system freeze protection temperature is set based on the pump freeze protection temperature.
7. Boiler Pump Delay	Set the boiler pump off delay time. • Setting range: 3 – 40 min • Default: 40 min
8. Low Pressure	Set the low water pressure. • Setting range: 0.1 – 1.2 bar • Default: 0.4 bar
9. Oil CMPS Rate	Set the oil consumption compensation rate. • Setting range : -25% – 25% • Default : 0 %
10. Service Notif Time	Set the time for service notification. • Setting range: 30 – 3650 days (10 years) • It can be set in 10 day increments. • Default: 1820 days (5 years)

Item	Description
11. Service Notif Cycle	Set the service notification according to the operating times. • Setting range: 300 – 36500 cycles • It can be set in 100 cycle increments. • Default: 18200 cycles
12. Factory Reset	Initialize all parameter settings (panel and PCB) to factory default.
13. P/W Change	Change the parameter setting password. Rotate the Command dial () to change numbers and places, and press the Command dial () to save the new password.

Combi Models

Item	Description
1. Supply MIN Set-point	Set the central heating supply minimum temperature. • Setting range: 25°C – [MAX Set-point – 20°C] • Default: 40°C
2. Supply MAX Set-point	Set the central heating supply maximum temperature. • Setting range: [MIN Set-point + 20°C] – 85°C • Default: 85°C
3. CH Burner Off Diff	Set the temperature range to turn off central heating. • Setting range : 0°C – 30°C • Default : 0°C
4. CH Burner On Diff	Set the temperature range to turn on central heating. • Setting range : 1°C – 30°C • Default : 20°C
5. DHW Pre-Heat Set Temp	Set the DHW Pre-Heating Set temperature. • Setting range: [DHW Set Temp + 10°C] – 80°C • Default: 75°C
6. DHW Burner Off Diff	Set the temperature range to turn off Domestic Hot Water. • Setting range: 0°C – 30°C • Default: 0°C
7. DHW Burner On Diff	Set the temperature range to turn on Domestic Hot Water. • Setting range: 1°C – 30°C • Default: 20°C
8. Anti Fast Cycling Time*	Set the anti-fast cycling time. • Setting range: 0 – 20 min • Default: 3 min
9. Freeze protection	Set the pump freeze protection temperature. • Setting range: 6°C – 10°C • Default: 10°C **Note** The system freeze protection temperature is set based on the pump freeze protection temperature.
10. Boiler Pump Delay	Set the boiler pump off delay time. • Setting range: 3 – 40 min • Default: 40 min
11. Low Pressure	Set the low water pressure. • Setting range: 0.1 – 1.2 bar • Default: 0.4 bar
12. Oil CMPS Rate	Set the oil consumption compensation rate. • Setting range : -25% – 25% • Default : 0 %
13. Service Notif Time	Set the time for service notification. • Setting range: 30 – 3650 days (10 years) • It can be set in 10 day increments. • Default: 1820 days (5 years)
14. Service Notif Cycle	Set the service notification according to the operating times. • Setting range: 300 – 36500 cycles • It can be set in 100 cycle increments. • Default: 18200 cycles
15. Factory Reset	Initialize all parameter settings (panel and PCB) to factory default.
16. P/W Change	Change the parameter setting password. Rotate the Command dial () to change numbers and places, and press the Command dial () to save the new password.

Note

- If you enter an incorrect password 10 times or make no inputs for 5 minutes, the boiler will return to Normal mode.
- To return to the previous mode, press the Reset button.
- The factory default password is "1234".
- If you make no inputs for 10 seconds in the Parameter Edit mode, the current parameter value will be saved automatically.
- Press and hold the Back button (⮌) in Parameter Edit mode for 5 seconds to reset individual parameters to their default values.
- When you reset one of the following parameters, the corresponding parameter will be reset automatically:
  - Supply Min or Max capacity limit
  - Return Min or Max capacity limit

* The anti-fast cycling time is the duration that the boiler stops its central heating operation when the central heating supply or return temperatures reach the set values for boiler operation stop temperatures. The boiler will not resume central heating until the duration elapses, even when the central heating supply or return temperatures return to within the set ranges.

4.6.5.4 Diagnosing the Boiler System

To run a series of test procedures for a system diagnosis, press the Back button (⮌) and the Menu button (M) simultaneously for 3 seconds, and then select "4. Test Mode".

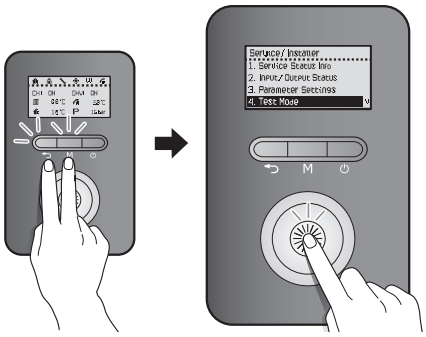

Rotate the Command dial (◎) to switch between the test procedures. Press the Command dial (◎) to run a test procedure.

Press the Back button (⮌) to return to the previous screen or menu.

System/Regular Models

Item	Description
1. Fan Motor	Test the fan operation by manually changing the fan speed. • From a stopped state, the fan speed gradually increases and reaches the top speed, and then the fan speed decreases until the fan stops operating. • Rotate the Command dial (◎) to run or stop the fan test.
2. Boiler Pump	Test the boiler pump operation. • The boiler pump is turned on as soon as you enter the test mode. • Press the Command dial (◎) to toggle the pump operation (On -> Off/Off -> On).
3. 2 Way Valve	Test the 2 way valve operation. • The 2 way valve is turned on as soon as you enter the test mode. • Press the command dial (◎) to toggle the valve operation (On -> Off/Off -> On). **Note** This option is not performed on Combi boilers.

Item	Description
4. 3 Way Valve	Test the 3 way valve operation. • The 3 way valve is turned on as soon as you enter the test mode. • Press the command dial (⊛) to toggle the valve operation [On(DHW) -> Off(CH)/Off(CH) -> On(DHW)].

Combi Models

Item	Description
1. Fan Motor	Test the fan operation by manually changing the fan speed. • From a stopped state, the fan speed gradually increases and reaches the top speed, and then the fan speed decreases until the fan stops operating. • Rotate the Command dial (⊛) to run or stop the fan test.
2. Boiler Pump	Test the boiler pump operation. • The boiler pump is turned on as soon as you enter the test mode. • Press the Command dial (⊛) to toggle the pump operation (On -> Off/Off -> On).
3. 3 Way Valve	Test the 3 way valve operation. • The 3 way valve is turned on as soon as you enter the test mode. • Press the Command dial (⊛) to toggle the valve operation [On(DHW) -> Off(CH)/Off(CH) -> On(DHW)].
4. Flow Control Valve	Test the flow control valve operation. Rotate the valve from its current position to fully (0%), then fully closed (100%) and then back to the starting position.
5. Mixing Valve	Test the mixing valve operation. Rotate the valve from its current position to fully (0%), then fully closed (100%) and then back to the starting position.

4.6.5.5 Setting the Special Operation Modes

To operate the boiler in special operation modes, press the Back button (⮌) and the Menu button (M) simultaneously for 3 seconds, and then select "5. Special Operations".

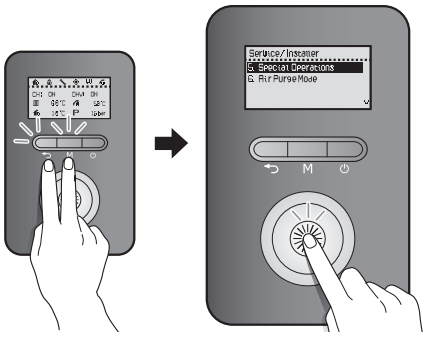

Rotate the Command dial (⊛) to switch between the operation modes. Press the Command dial (⊛) to select an operation mode.

The boiler resumes operation in normal operation mode if no input is detected for 3 hours.

Press the Back button (⮌) to return to the previous screen or menu.

Item	Description
1. Normal (Default)	Set the boiler to run in normal operation mode.
2. MIN	Set the boiler to run in minimum operation mode.
3. MAX	Set the boiler to run in maximum operation mode.

4.6.5.6 Setting the Air Purge Modes

To run the boiler in a special operation mode, press the Back button (⮌) and the Menu button (M) simultaneously for 3 seconds, and then select "6. Air Purge Mode."

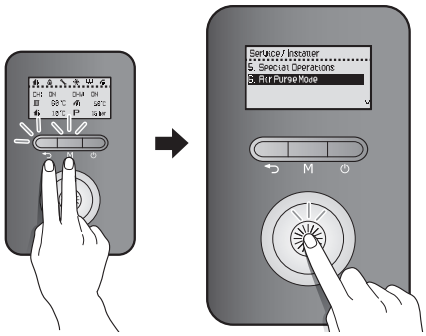

Rotate the Command dial (⭘) to switch between the operation modes. Press the Command dial (⭘) to select an operation mode.

The boiler resumes in normal operation mode if no input is detected for 3 hours.

Press the Back button (⮌) to return to the previous screen or menu.

Item	Description
1. CH Pipe Air Purge	Run an air purge on the central heating pipe.
2. DHW Pipe Air Purge	Run an air purge on the DHW pipe. **Note** • For Combi models, air purge can be performed regardless of the DHW operation setting. • For System models, air purge can only be performed when the DHW operation is set to: - Cylinder Stat - Cylinder Sensor

4.7 Wiring Diagram

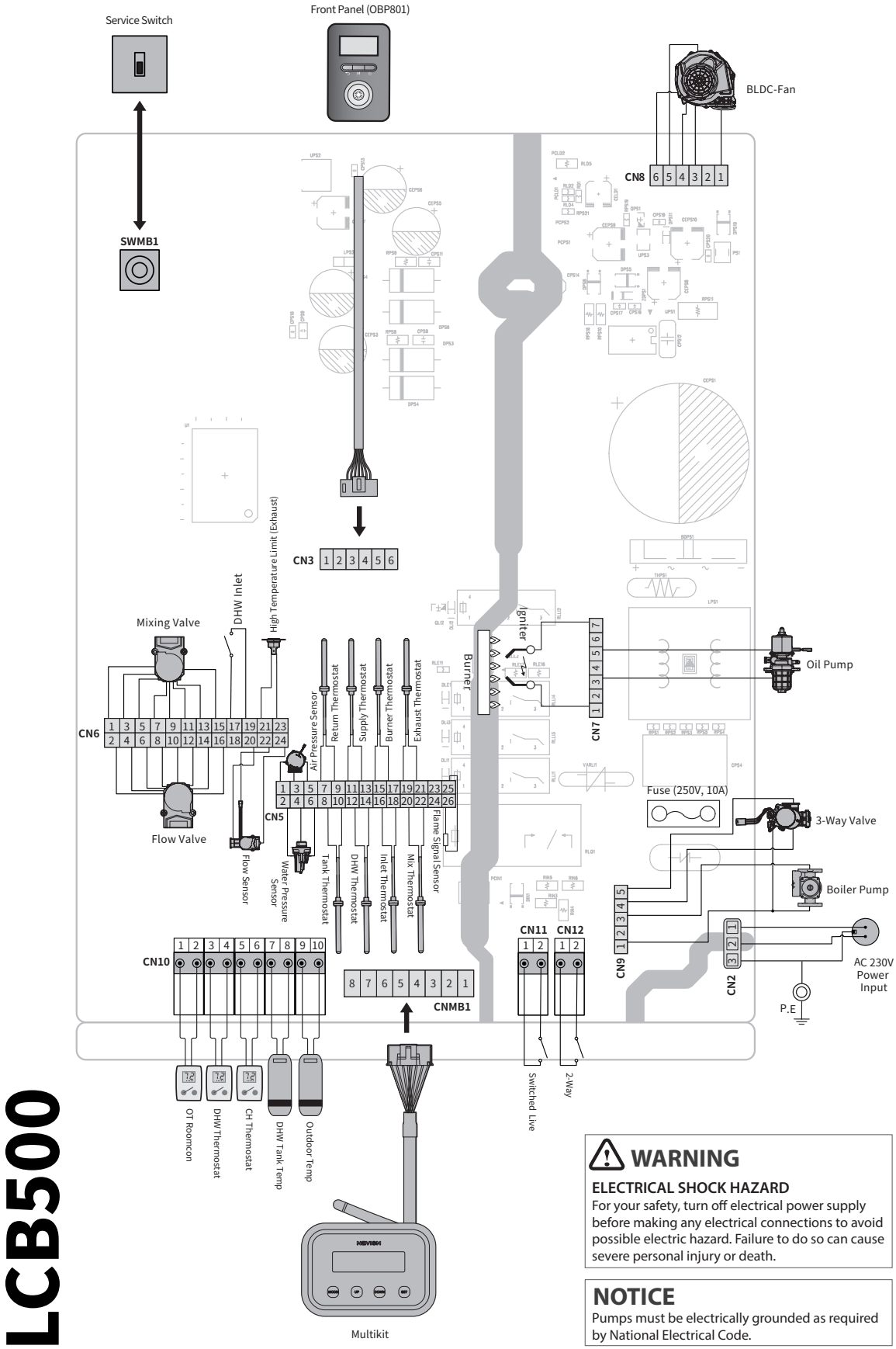

LCB500

⚠ WARNING

ELECTRICAL SHOCK HAZARD

For your safety, turn off electrical power supply before making any electrical connections to avoid possible electric hazard. Failure to do so can cause severe personal injury or death.

NOTICE

Pumps must be electrically grounded as required by National Electrical Code.

5. Troubleshooting

5.1 Error Self-diagnostic/Action

Classification	Error Code	Description	Reset	Self-diagnostic/Action
Combustion	E003	Ignition failure	Manual	An ignition failure error occurs after three consecutive safety blocks. 1. Check if the fuel tank is properly supplying fuel. 2. Check if the oil pump is operating properly. 3. Check if the ignition transformer is operating properly. 4. Clean or replace the CDS if the boiler switches off immediately after ignition.
	E004	False flame detection	Auto	An error occurs if a flame is detected before combustion. 1. Check if the CDS is operating properly. 2. Check that the flame detector bracket is properly assembled without any gaps.
	E012	Flame loss	Manual	An error occurs if a flame is lost during combustion. 1. Check if the fuel tank is properly supplying fuel. 2. Check if the oil pump pressure is within the proper operating range. 3. Check the exhaust for any backflow. 4. Check the connection terminals of the CDS.
	E016	Heat exchanger overheat	Manual	An error occurs when heat exchanger overheats during combustion. 1. Turn the boiler off for a minimum of 30 minutes and restart the boiler. 2. Check that all valves and filters are open and the air release valve is operating properly. 3. Check the external circulation pipe direction for regular type boilers. 4. Check the high limit stat.
	E030	Abnormal exhaust temperature	Manual /Auto	An error occurs when the exhaust thermistor registers at 110°C or more. 1. Turn the boiler off for at least 30 minutes and restart the boiler. 2. Check all valves and filters are open and the air release valve is operating properly. 3. Check the exhaust thermistor.
	E046	Abnormal operation: Heat exchanger overheating sensor	Auto	An error occurs in the case of abnormal operation in the heat exchanger high limit stat. 1. Check the heat exchanger high limit stat. 2. Check if the heat exchanger high limit stat is properly connected.
	E047	Abnormal operation: Exhaust thermostat	Manual /Auto	An error occurs in the case of abnormal operation in the exhaust thermistor. 1. Check the exhaust thermistor connection. 2. Check if the exhaust temperature sensor is properly connected. 3. Check the resistance of the sensor (Stop operating and lower the temperature before checking).
	E056	Abnormal operation: Oil pump	Manual	An error occurs in the case of abnormal operation in the oil pump. 1. Clean the oil pump filter. Refer to "8.2 Maintenance Schedules" on page 97. 2. Check if the oil pump is stuck. If there is moisture in the fuel supply, remove moisture from the oil pump. 3. Check the oil pump connections. 4. Check for short circuits or open circuits in the oil pump coil.

Classification	Error Code	Description	Reset	Self-diagnostic/Action
Air Circulation	E109	Abnormal operation: Fan motor RPM	Manual	An error occurs in the case of abnormal operation in the fan. 1. Check if the fan motor works normally using component the test mode. 2. Check for proper voltage from PCB. Replace fan if PCB voltage is normal.
	E110	Exhaust blockage (Condensate blockage)	Manual	An error occurs when exhaust or condensate flue is blocked during combustion. 1. Check the flue for obstructions. 2. Check and clean the intake pipe and hose. 3. Check the condensate trap and drain piping for obstruction or blockages. 4. Check if the combustion chamber is blocked by soot or other foreign substances.
	E123	Abnormal operation: Fan output	Manual	If the ignition RPM is not satisfied during the Fan Control (40 State) period (25-second), the error count will increase. 1. Check the power supply to the fan (Black + Red, approx. DC310C). 2. Check the fan wire connection. 3. If the issues continue despite checking the items above, replace the PCB.
	E127	Abnormal operation: APS	Manual/ Auto	An error occurs in the case of abnormal operation of the APS before fan operation. 1. Check if the APS connection is properly connected.
Central Heating Circulation	E205	Heating supply thermistor open or short circuit	Auto	An error occurs in the case of abnormal operation in the DHW supply temperature sensor. 1. Check the thermistor and wire connections are secure. 2. Check the resistance of the sensor (Stop operating and lower the temperature before checking). 3. Check the pump connection.
Water Supply	E302	Low water pressure	Auto	An error occurs when low water pressure is detected. 1. Check if water leaks from the heating pipe. 2. Open the water supply valve and add water below 1.0 bar. 3. Check the output voltage of water pressure sensor. (Norma state: 0.3–2.8 V)
	E352	High water pressure	Auto	An error occurs when high water pressure is detected. 1. Check incoming water pressure and any activity at pressure relief valve. 2. Check the output voltage of water pressure sensor. (Norma state: 0.3–2.8 V)
	E353	Abnormal operation: Water pressure sensor	Auto	An error occurs in the case of abnormal operation in the water pressure sensor. 1. Check the water pressure sensor output voltage. (Normal state: 0.25–4.93 V)
DHW Circulation	E407	DHW Outlet thermistor Open or Short Circuit	Alarm	An error occurs in the case of abnormal operation in the DHW Outlet temperature sensor. 1. Check the thermistor and wire connections are secure. 2. Check the resistance of the sensor (Stop operating and lower the temperature before checking).
	E421	DHW Inlet thermistor Open or Short Circuit	Alarm	An error occurs in the case of abnormal operation in the DHW Inlet temperature sensor. 1. Check the thermistor and wire connections are secure. 2. Check the resistance of the sensor (Stop operating and lower the temperature before checking).
	E441	DHW Outlet 2 thermistor Open or Short Circuit	Alarm	An error occurs in the case of abnormal operation in the DHW Outlet 2 temperature sensor. 1. Check the thermistor and wire connections are secure. 2. Check the resistance of the sensor (Stop operating and lower the temperature before checking).

Classification	Error Code	Description	Reset	Self-diagnostic/Action
DHW Circulation	E445	Abnormal operation: Mixing valve	Alarm	An error occurs in the case of abnormal operation in Mixing valve. 1. Check the Mixing valve and wire connections are secure.(Stop operating before checking). 2. Check the voltage on the PCB to verify proper power to the valve.
Controller (PCB)	E515	Abnormal operation: Relay feedback (PCB)	Manual	An error occurs in the case of abnormal operation in the controller circuits (resistance, TR, etc.). 1. Check the PCB. 2. Check the wire connection between fan and main PCB. 3. Check the wire connection between oil pump and main PCB.
	E517	Abnormal operation: DIP switch setting (PCB)	Manual	An error occurs in the case of abnormal DIP switch settings. 1. Check the DIP switch settings on the PCB.
	E594	Abnormal operation: EEPROM (PCB)	Alarm	An error occurs in the case of abnormal operation in the controller EEPROM. 1. Check the PCB.
Controller (MCU)	E615	Abnormal operation: Input and memory (MCU)	Manual	An error occurs in the case of abnormal operation in the controller MCU (RAM, ROM, Stack malfunction, etc.). 1. Check the PCB.
Installation	E740	Abnormal operation: Outdoor temperature sensor	Auto	An error occurs in the case of abnormal operation of the outdoor temperature sensor. 1. Ensure that the outdoor reset curve is configured properly. 2. Check the outdoor temperature sensor wiring 2 connection.
	E782	Abnormal operation: Main panel communication	Auto	An error occurs in the case of an abnormal connection between the front panel and the main controller. 1. Check the connection between the front panel and the main controller.
	E783	Abnormal operation: OpenTherm remote control	Auto	An error occurs in the case of an OpenTherm remote control communication error. 1. Check the OpenTherm remote control connection.

If any of the above solutions do not resolve the problem with the Boiler, contact Navien's Technical department.

There will be error codes displayed on the front panel and recorded on the PCB board (within the unit) of any problems or failures that occur with the Boiler.

IMPORTANT

To reset the Boiler, either press the [Reset] button on the front panel or disconnect, then reconnect electrical power to the boiler.

5.2 Error Conditions and Check Items

5.2.1 003 Error

Error occurrence conditions and check items

Error	Description
E003 Ignition failure	If the supply of fuel and ignition are turned off by the safety shutdown function, repeat the restart (operation according to pre-purge, pre-ignition, fuel supply, and flame detection) and count the number of safety shutdowns to cause five consecutive ignition errors (during a combustion shutdown the safety shutdown number will reset).
Check items	1. Check if the oil supply valve is open and use a manometer to verify proper supply pressure. 2. Check the electrode gap, electricity discharge, or deformation of the flame rod. 3. Check the operation of the ignition transformer (ignition state, input power: AC 230 V) 4. Check the operation of the Oil pump (AC 230 V). 5. Check the CDS, wiring and grounding. 6. If the issues continue despite checking the items above, replace the PCB.

Scenario1

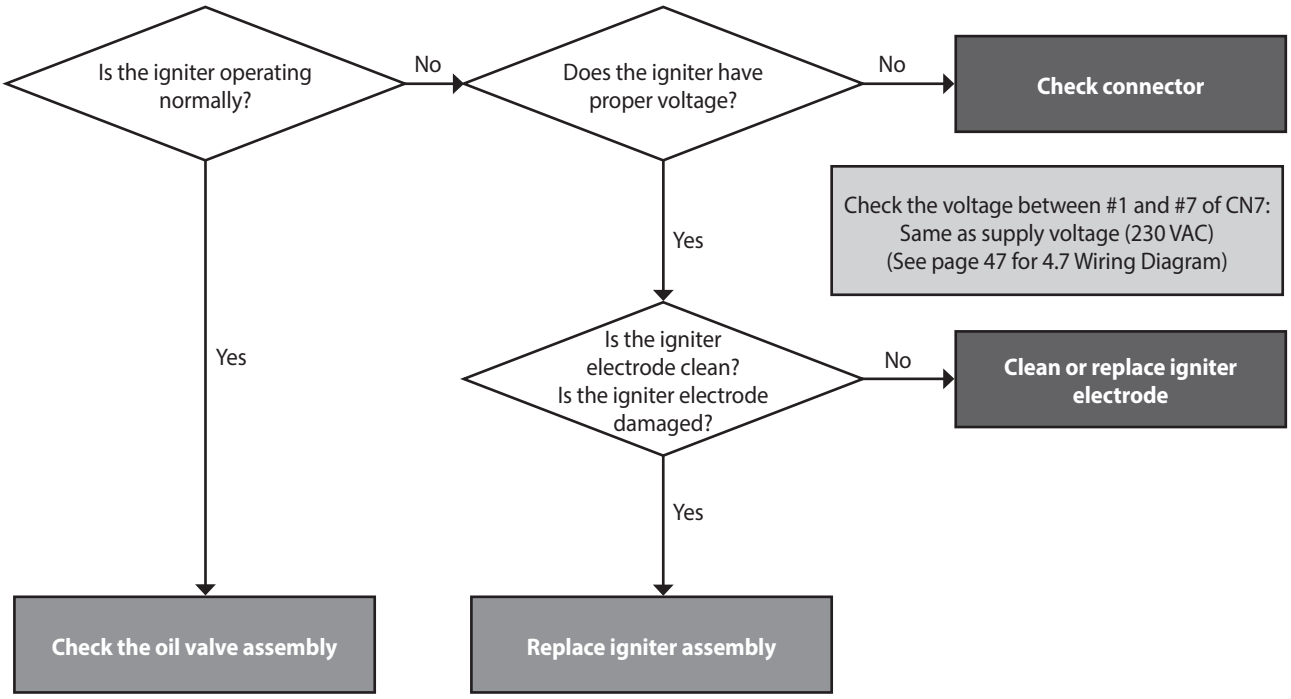

Scenario2

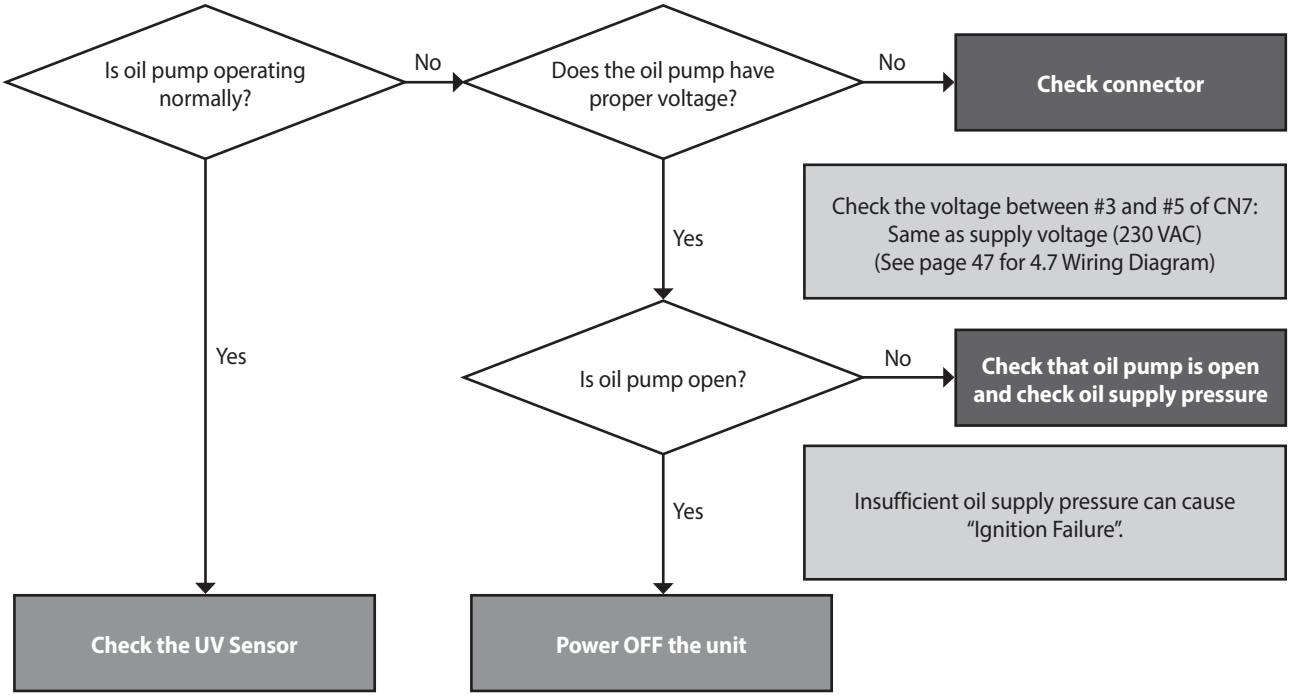

Scenario3

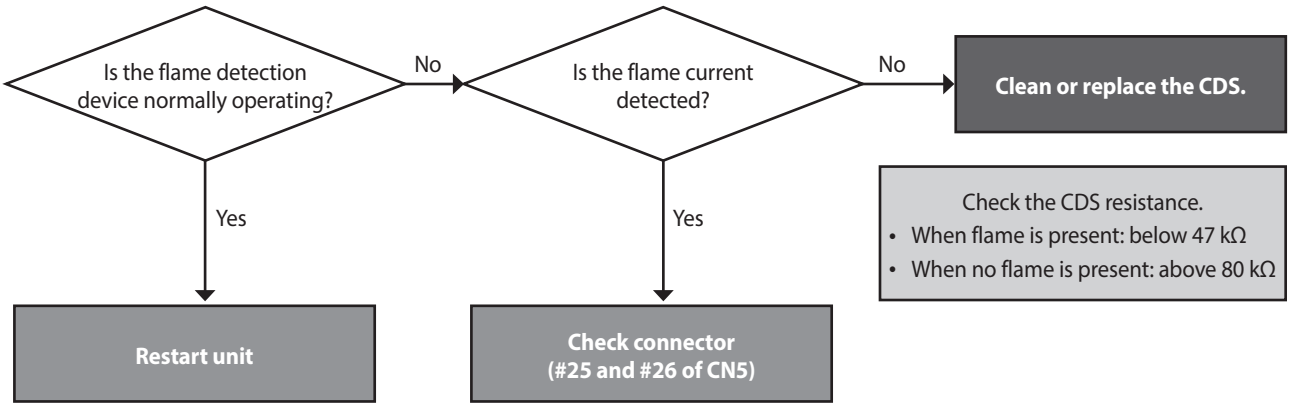

Check method

Fault	Possible Causes	Check method
Ignition failure	Oil supply error	1. Check if the oil tank is filled or oil valve is open. 2. Check if the oil pump is properly operating. 3. Check the oil nozzle for blockage.
	Defective electrode gap and shape	1. Check that the electrode gap is within 4 ± 0.5 mm. 2. Check the electrodes for debris and contamination.
	No spark from electrode	1. Check for cracks in the electrode insulation. 2. Check the ignition transformer input and output connection. 3. Check if the ignition transformer is operating properly.
Repeated ignition-out	Flame sensing error	1. Check the electrode, if there is any deformation or foreign substance, repair or replace the part. 2. Check the CDS wire for proper connection and/or damage. 3. Use a multi-meter to measure the flame sensing resistance (normally below 47 kΩ).
	Defective PCB	If the trouble continues despite the checking of above items, replace the PCB.

5.2.2 004 Error

Error occurrence conditions and check items

Error	Description
E004 False-flame detection	1. If a flame signal is detected continuously for 3 seconds before combustion, a false-flame error (E004: automatically cleared) will be displayed on the front panel. 2. If the fuel supply is cut off and a flame signal is continuously detected for more than 3 seconds after combustion ends, a false flame error (E004: automatically cleared) will be displayed. • Post-Puge_1(State 60), false-flame errors are not detected, only the count increases. • Post-Purge_2(State 72), false-flame errors are detected. 3. After combustion ends, if no flame is detected within 2 seconds, or if flame is not detected at all, the system will not register an error until it transitions back to the pre-combustion state.
Check items	1. Check the CDS resistance. 2. Check that the flame detector bracket is properly assembled without any gaps. 3. Check for the presence of soot buildup or residual oil inside the combustion chamber. 4. If the issues continue despite checking the items above, replace the PCB.

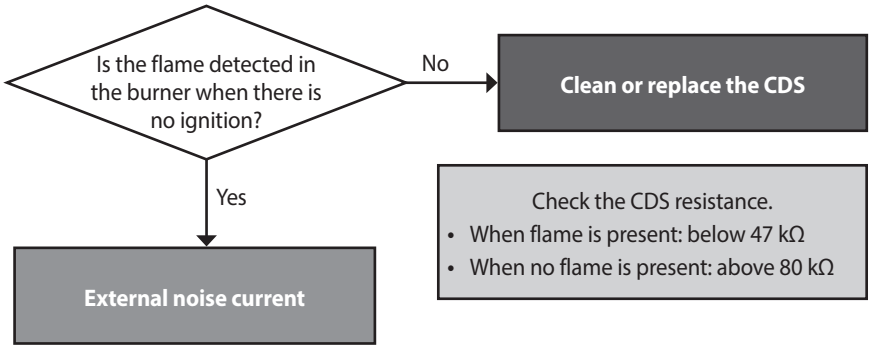

Check method

Fault	Possible Causes	Check method
Error before/after combustion	Abnormal flame detected	Check that the flame detector bracket is properly assembled without any gaps. Check for the presence of soot buildup or residual oil inside the combustion chamber.
	CDS sensor fault	Check the CDS resistance.
Other trouble	Defective PCB	If the trouble continues despite the checking of above items, replace the PCB.

5.2.3 012 Error

Error occurrence conditions and check items

Error	Description
E012 Flame loss	If a flame signal is not detected during combustion, the fuel supply will be stopped, and state 74 (post-purge), fuel supply, and flame detection will repeat. If flame detection fails five consecutive times, an error will be displayed.
Check items	1. Check if the oil is properly supplied to the boiler. 2. Check for exhaust gas backflow. 3. Check if the controller is properly operating.

Check method

Fault	Possible Causes	Check method
Flame loss and noise occurs after ignition	Oil supply error	1. Check if the oil tank is filled or oil valve is open. 2. Check if the oil pump is properly operating.
	Exhaust gas backflow	1. Check the CO_2 and O_2 concentrations inside the unit. • O_2: If the detected level is under 20.8%, there is exhaust backflow. • CO_2: If the detected level is over 0%, there is exhaust backflow.
	Abnormal flame detected	1. Check the connection terminals of the CDS for proper contact. 2. Inspect the CDS for any foreign substances, and clean it if contamination is found.
Other trouble	Defective PCB	If the trouble continues despite the checking of above items, replace the PCB.

5.2.4 016 Error

Error occurrence conditions and check items

Error	Description
E016 High limit stat overheated	• If the heat exchanger high limit stat opens after overheating during combustion (15 seconds after combustion start) and the high limit stat is open for more than 0.5 seconds, a heat exchanger overheat error message (E016: manually cleared) will be displayed on the front panel. • If the heat exchanger overheats and the high temperature limit stat opens within 15 seconds after combustion starts, combustion shall stop and remain stopped until the open signal disappears. No error message will be displayed. • If the heat exchanger overheat is detected, when combustion is stopped, no error message will be displayed and combustion shutdown is maintained until the heat exchanger overheat signal disappears. At this time, if the supplied water temperature is below 60°C, a heat exchanger overheat sensor error (E046: automatically cleared) will be displayed on the front panel.
Check items	

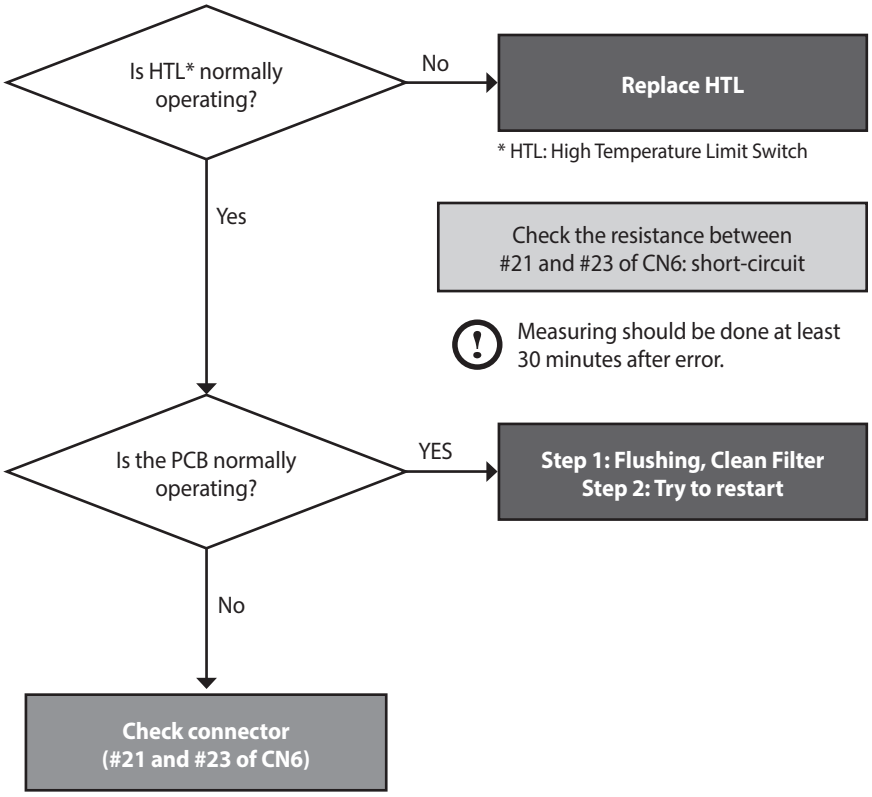

Check method

Fault	Possible Causes	Check method
Defective safety device	Defective high limit stat	Check if the contact point of the high limit stat is defective. • Use a multi-meter to see if the resistance is normal (0.3Ω) or abnormal (∞). 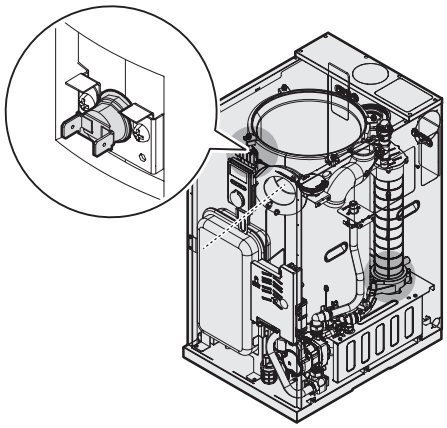
Other trouble	Heat exchanger assembly overheated	The surface temperature rises due to heavy scale deposits in the heat exchanger assembly. • Flush the heat exchanger assembly.
	Defective PCB	If the trouble continues despite the checking of above items, replace the PCB.

5.2.5 030 Error

Error occurrence conditions and check items

Error	Description
E030 Exhaust gas temperature error	• If the exhaust temperature sensor detects a temperature of over 110°C for more than 10 seconds, combustion will stop and the exhaust temperature error message (E030: automatically cleared) will be displayed on the front panel and a post-purge will start. • If the exhaust temperature is below 60°C during post-purge, the error message will be cleared and combustion will restart. • If exhaust temperature is over 60°C after post-purge exhaust temperature error message (E030: manually cleared) will be displayed on the front panel. When there is continuous heat demand after exhaust gas temperature is over 110°C and stops combustion and the exhaust temperature is under 60°C during post-purge and combustion restarts 3 times, the exhaust gas temperature error message (E030: manually cleared) will be displayed. (If heat demand is gone, the detection count is reset.)
Check items	1. Check if the exhaust thermistor operates normally. 2. Check if the PCB works properly.

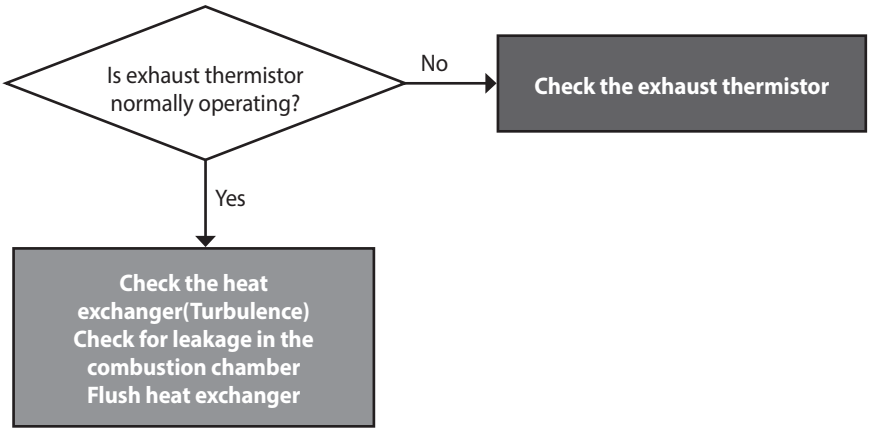

Check method

Fault	Possible Causes	Check method
Heat exchanger overheated	Damaged or clogged heat exchanger	1. The error occurs due to high exhaust gas temperature caused by a damaged or clogged heat exchanger. 2. Flush the heat exchanger to remove scale deposits. 3. Replace the heat exchanger if it is damaged or cannot be unclogged.
Defective part	Defective temperature sensor	Defective contact point of the exhaust gas high limit stat 110°C Max • Check connection of the exhaust thermistor. • If the resistance is abnormal, replace the temperature sensor. • Check the output temperature displayed on the PCB.
	Defective PCB	If the trouble continues despite the checking of above items, replace the PCB.

5.2.6 046 Error

Error occurrence conditions and check items

Error	Description
E046 Abnormal heat exchanger overheat sensor	The boiler displays abnormal heat exchanger overheat sensor (E046: automatically cleared) and continues safety-shutdown if the heat exchanger is not overheated (16), the supply water temperature is below 60°C in during combustion stop, and heat exchanger overheat is detected for more than 10 seconds.

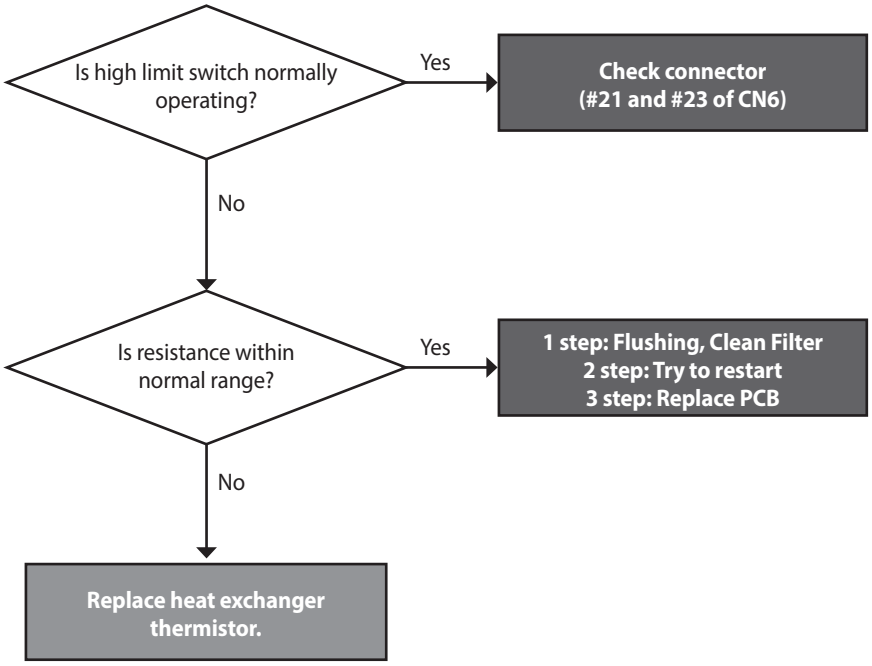

5.2.7 047 Error

Error occurrence conditions and check items

Error	Description
E047 Exhaust thermostat error	1. If the exhaust gas temperature sensor 10-bit AD value is over 1020 (resistance value approx. 894.4K Ω) for more than 3 seconds after performing post-purge 1, stop and restart combustion. If this action is performed three times consecutively, the exhaust gas sensor error (E047: manually cleared) will be displayed on the front panel. 2. If the exhaust gas temperature sensors 10-bit AD value is below 50 for more than 3 seconds the exhaust gas sensor error (047: manually cleared) will be displayed on the front panel. (The AD value must be checked regardless of combustion status, and the resistance for 50 AD is approx. 0.155K Ω)

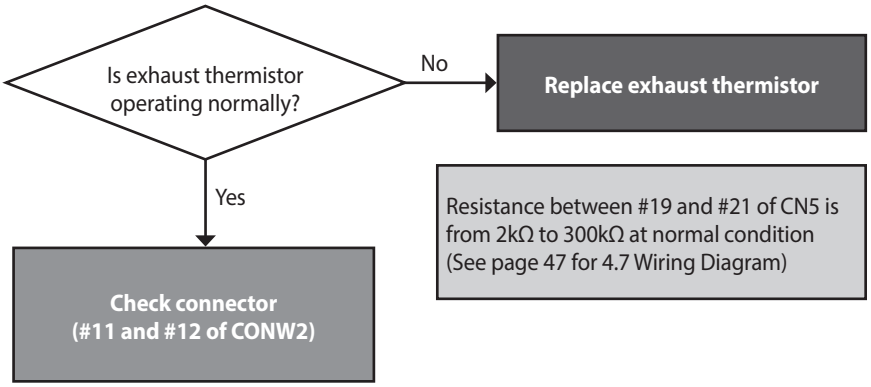

5.2.8 109 Error

Error occurrence conditions and check items

Error	Description
E109 Fan motor RPM error	1. If 0 RPM is detected during fan action, stop combustion and perform the abnormal fan check procedure. The abnormal fan check procedure entails turning the fan off and performing fan RPM control for 10 seconds. 2. If over 0 RPM is detected during abnormal fan check procedure and fan RPM control fan check procedure ends, and normal operation starts. 3. If 0 RPM is detected after the abnormal fan check procedure, the abnormal fan error message (E109: manually cleared) will be displayed and the boiler will go into lock-out mode.
Check items	1. Check if the fan motor works normally using the component test mode. 2. Check the power supply to the fan (Black + Red, approx. DC 310 V). 3. If RPM is significantly low while the fan works and the power supply is normal, replace the fan motor. 4. If the fan connector is wet due to any reason including leakage, take corrective action by powering the unit OFF, then drying the components completely before continuing operation. 5. Check for loose connection of white connector that attaches the fan motor to the PCB.

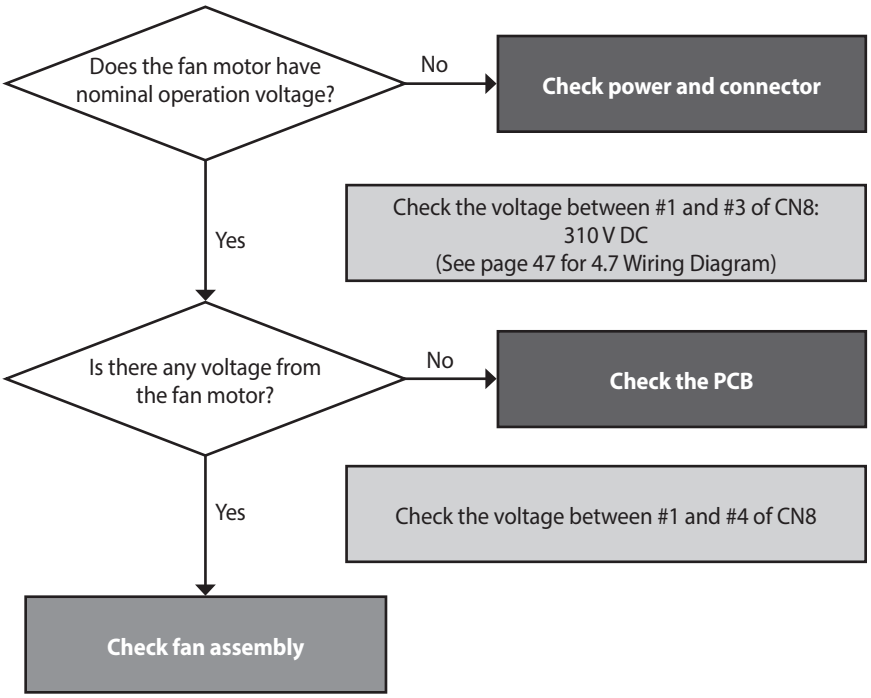

Check method

Fault	Possible Causes	Check method
Fan action error	No fan operation	1. Check the power supply to the blower. • Black + Red, approx. DC 310 V 2. Replace the PCB if voltages are abnormal. (When replacing the PCB, turn off the unit and then wait for at least 10 seconds before proceeding.) 3. If the issue continues despite the checking the items above, replace the fan motor.
Fan motor RPM error	Defective rotator	1. If RPM is significantly low while the fan is operating and the power supply is normal. Follow the instructions listed below and replace the fan. 1) Off the power switch to the unit and then wait for about 10 seconds until the remaining voltage completely discharges. 2) Disconnect the fan cable and then re-connect it. 3) Plug the power cable and turn on the unit. 4) Fan Auto Adjusting verifies error conditions for error code E109. If an E109 error occurs, enter the Fan Test Mode and verify fan RPM input voltage. 5) If RPM is low or there is a sensor circuit error, replace the fan. Indicates an imminent hazardous situation which, if not avoided, may result in minor or moderate injury. 2. If the issue continues despite checking the items above, replace the PCB.

5.2.9 110 Error

Error occurrence conditions and check items

Error	Description
E110 Exhaust blockage (Condensate blockage)	1. An error is detected if the current APS value remains below the exhaust closure detection threshold for 15 seconds during combustion. • When the unit is forced to operate at maximum heat output, if the APS value remains below the error specification for 15 seconds, combustion will stop and the system will transition to Safety Shut-Down mode. Error E110 will be displayed. 2. After a manual reset, the error will be cleared.
Check items	1. Check if the condensation drain line or the drain is clogged. 2. Check the flue and exhaust to verify proper installation and clearances. (Circulation of exhaust gas generates noise.) 3. Check if the air supply/exhaust flue is clogged (rainwater may collect inside from an improperly installed air supply/exhaust pipe). 4. Make sure that venting is sloped downwards towards the unit for proper condensate drainage. 5. Check if the combustion chamber is blocked by soot or other foreign substances. 6. Defective PCB.

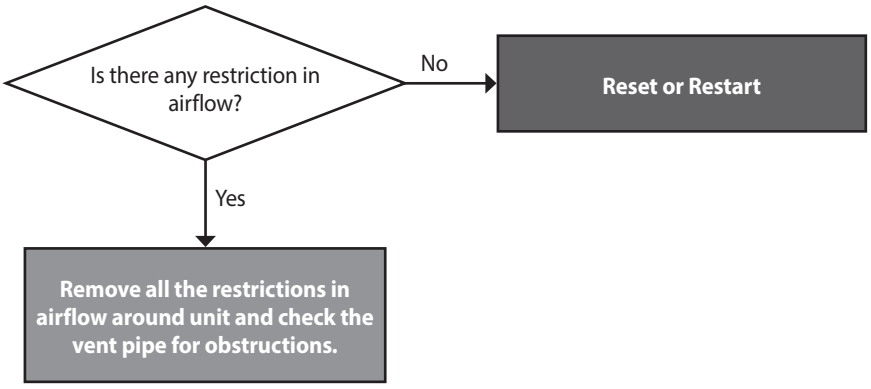

Check method

Fault	Possible Causes	Check method
110E Exhaust blockage	Abnormal flow of intake air supply/exhaust	1. Air supply/exhaust vent for any blockages. 2. Blocked condensate drain 3. If the air pressure sensor hose is broken or clogged. 4. Replace the old PCB with the latest version.
Condensate drain error	Condensate drain error	Exhaust air is blocked due to condensate drain error. • Check if the condensate hose or the siphon is frozen. • Check if the condensate hose is kinked. • Remove bottom of trap and verify it is not blocked.
Defective air supply/ exhaust flue	Deformed or clogged flue	1. Check the exterior of the flue for damage and obstructions. 2. Check if rainwater is collected due to vertical installation of the air intake pipe.
	Exhaust gas flows in through the supply pipe	If the exhaust gas enters into the air supply pipe, abnormal combustion may cause E110. • Check the installation of the flue.

5.2.10 123 Error

Error conditions and Check Items

Error	Description
E123 Fan output error	1. If the ignition RPM is not satisfied during the Fan Control (40 State) period (25-second), the error count will increase. 2. Maintain the stop state and enter lock-out mode.
Check items	1. Check the power supply to the fan (Black + Red, approx. DC 310 V). 2. Check the fan wire connection. 3. If the issues continue despite checking the items above, replace the PCB.

5.2.11 127 Error

Error occurrence conditions and check items

<table>
<tr><th>Error</th><th>Description</th></tr>
<tr><td>E127
Abnormal operation: APS</td><td>
Abnormal APS operation (E127: automatically cleared) detects open circuits, short circuits, abnormal APS operation before pre-purge or fan operation and go into safety-shutdown or lock-out.

1. Safety-shutdown activation conditions
• APS abnormal open (sub 01): APS AD value is below 3 for more than 3 seconds.
• APS abnormal short (sub 02): APS AD value is over 240 for more than 3 seconds.
• APS abnormal default value (sub 03): APS AD value is over 60 for more than 3 seconds and the fan stopped for more than 30 seconds with an RPM of 0.

2. Lock-out activation conditions
• APS unresponsive (sub 05).

If the conditions match [During Pre-purge APS_AD value < Before Pre-purge APS_AD value + 3] restart pre-purge action is over 10 with no APS change.
<table>
<tr><th>Status</th><th>APS value update before pre-purge conditions</th></tr>
<tr><td>Activation after error cleared</td><td>10 seconds after fan output if off, APS values are updated. (combustion starts once APS values is updated before pre-purge)</td></tr>
<tr><td>Normal activation</td><td>10 seconds after fan output if off, APS values are updated.</td></tr>
</table>
APS values are not updated when an abnormal exhaust temperature error (automatically cleared) is cleared.
</td></tr>
</table>

5.2.12 205 Error

Error occurrence conditions and check items

Error	Description
E205 Heat exchanger output temperature sensor open	• If DHW temperature sensor's 10-bit AD value is below 50 (approx. 0.24V) for more than 3 seconds continuously. • If DHW temperature sensor's 10-bit AD values is over 1012 (approx. 4.94V) for more than 3 seconds continuously.
Check items	1. Check if the heat exchanger output temperature sensor connector is wet due to any reason, including leakage. 2. Replace the defected heat exchanger output temperature sensor. 3. Check circulation pump operating status and for proper flow through the space heating line. 4. Check the voltage on the PCB to verify proper power to the pump. If there is no voltage, replace PCB. Otherwise, bleed out air from the system before resetting the unit. If issue persists, replace the pump.

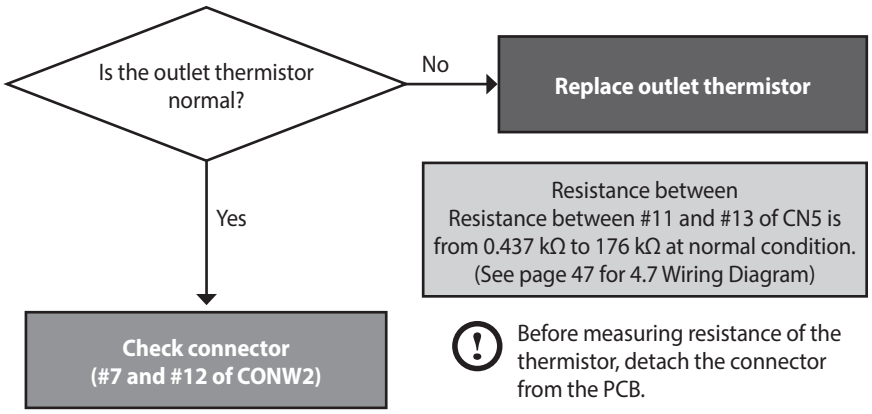

Check method

Fault	Possible Causes	Check method
Defective sensor	Defective temperature sensor connector	Check if the temperature sensor is open and if the connector is connected properly.
	Temperature sensor	Check the resistance of the temperature sensor. (Defective if it is 30kΩ or higher) • Replace the temperature sensor if the resistance value is abnormal. • Check the temperature displayed on the front panel.
Possible Issues	Defective circulation pump(external)	Check power supply to the circulation pump
	Defective PCB	If the issues continue despite checking the items above, replace the PCB.

5.2.13 302 Error

Error conditions and Check Items

<table>
<tr><th>Error</th><th>Description</th></tr>
<tr><td>E302
Low water pressure</td><td>If the water pressure sensor detects that the water pressure is lower than [the standard water pressure] for more than three seconds consecutively, the system determines that there is no water in the boiler and piping and an error message of low water pressure (“302,” manually cleared) is displayed.
However, if a malfunction occurs when the water pressure sensor is in the Open or Short status, the low water pressure error will not be determined.
The standard water pressure over the low water pressure can be set on the panel, and the setting method is shown as below.
<table><tr><th>Parameter Setting</th><th>Setting range</th><th>Default</th></tr><tr><td>Low Pressure</td><td>0.1 bar – 1.2 bar</td><td>0.4 bar</td></tr></table></td></tr>
<tr><td>Check items</td><td>1. Check if water leaks from the heating pipe.
2. Check if the water supplied pipe open.
3. Check the water pressure sensor.</td></tr>
</table>

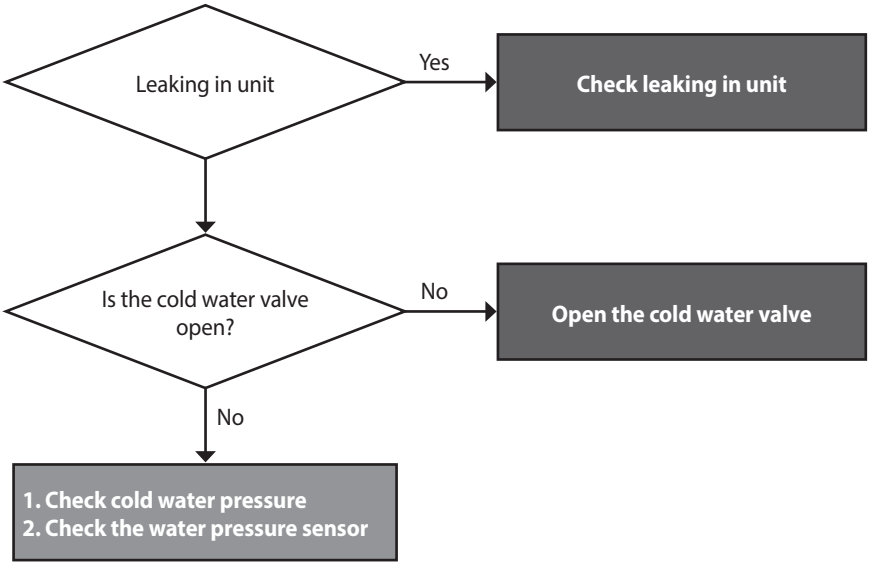

Check method

Fault	Possible Causes	Check method
Low water pressure	Leaking in unit	1. Check if water leaks from the heating pipe.
	Water supply unavailable	1. Open the water supply valve and add water below 1.0 bar.
	Water pressure detection fault	1. Check the output voltage of water pressure sensor. (Norma state: 0.3–2.8 V) 2. Replace the PCB If the water pressure sensor is not faulty.

5.2.14 352 Error

Error conditions and Check Items

Error	Description
E352 High water pressure	1. If the electronic water pressure detector detects high water pressure (over 3.9 bar) for more than 3 seconds, the boiler will stop and the high water pressure detected message (352/3520 - Service code, automatically cleared) will be displayed. 2. In case the electronic water pressure detector opens or short circuits, the high water pressure error will be cleared and water pressure will be properly detected.
Check items	1. Check if the cold water pipe input water pressure sensor is wet due to any reason, including leakage. 2. Check the controller.

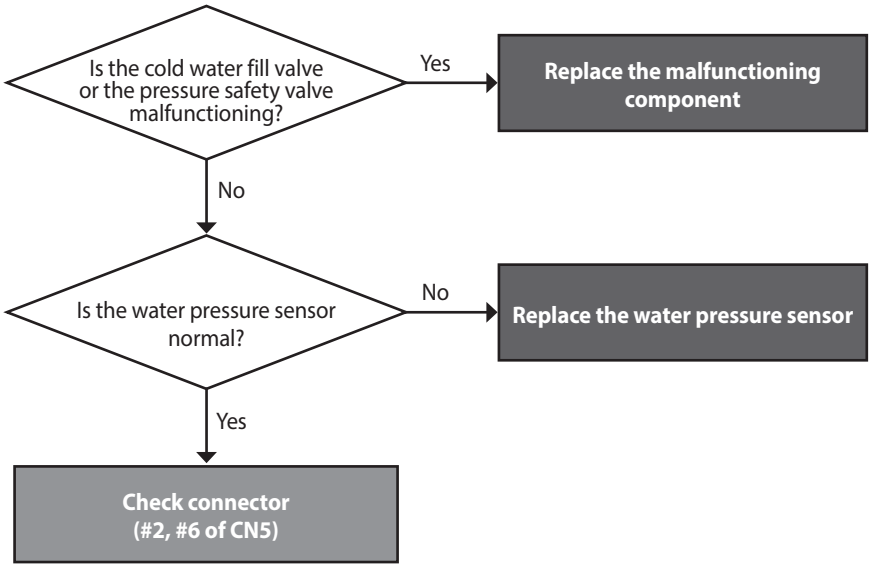

Check method

Fault	Possible Causes	Check method
High water pressure	High supply water pressure	1. Drain water until the pressure is reduced to below 3.9 bar.
	Water pressure detection fault	1. Check the output voltage of water pressure sensor. (Norma state: 0.3–2.8 V) 2. Replace the PCB If the water pressure sensor is not faulty.

5.2.15 353 Error

Error conditions and Check Items

Error	Description
E353 Abnormal water pressure sensor	If an error (under 0.25 V or over 4.93 V) in the water pressure sensor is detected continuously for 3 seconds, The system displays the error message E353 on the front panel. If this occurs, the boiler initiates safety shut-down.
Check items	1. Check if the cold water pipe input water pressure sensor is wet due to any reason, including leakage. 2. Replace the water pressure sensor. 3. Check the controller.

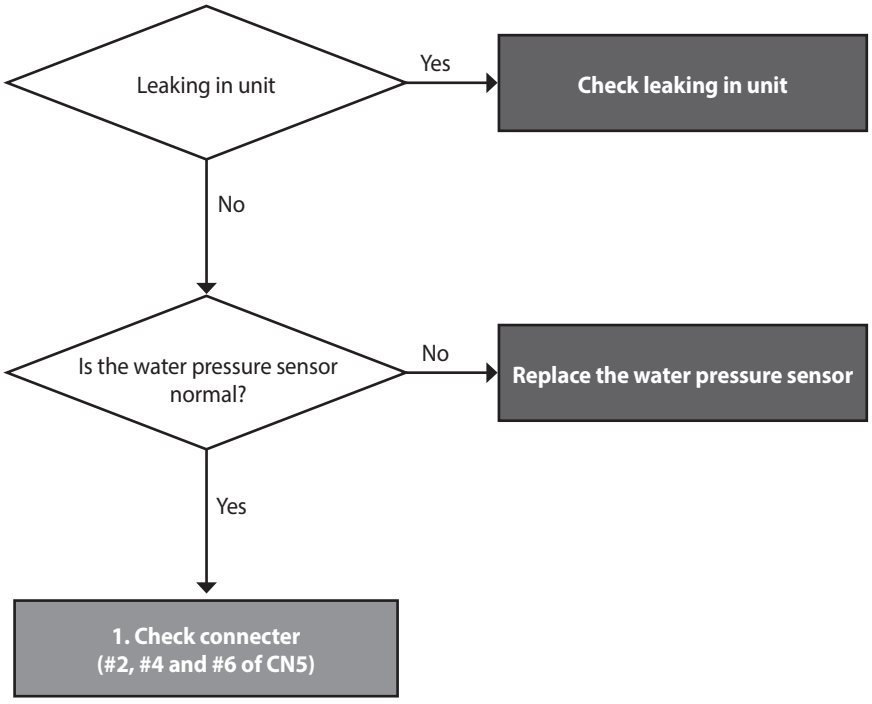

Check method

Fault	Possible Causes	Check method
Abnormal water pressure sensor	Defective water pressure sensor	1. Check the sensor is not frozen during the winter. 2. Check the output voltage. (Normal state: 0.25–4.93 V) 3. Replace the PCB if power is not supplied.

5.2.16 407 Error

Error occurrence conditions and check items

Error	Description
E407 DHW outlet thermistor open or short circuit	1. If the DHW outlet thermistor 10 bit AD value is lower than 50 for more than 3 seconds, "E407" will be displayed on the front panel. 2. If the DHW outlet thermistor 10 bit AD value is higher than 1012 for more than 3 seconds, "E407" will be displayed on the front panel.
Check items	1. Check if the DHW Outlet temperature sensor connector is wet due to any reason, including leakage. 2. Replace the defected the DHW outlet thermistor. 3. Check the DHW outlet thermistor wire connection. 4. Check for any abnormalities in the DHW outlet thermistor. 5. If the issues continue despite checking the items above, replace the PCB.

5.2.17 421 Error

Error occurrence conditions and check items

Error	Description
E421 DHW Inlet thermistor open or short circuit	1. If the DHW inlet thermistor 10 bit AD value is lower than 50 for more than 3 seconds, "E421" will be displayed on the front panel. 2. If the DHW inlet thermistor 10 bit AD value is higher than 1012 for more than 3 seconds, "E421" will be displayed on the front panel.
Check items	1. Check if the DHW Inlet temperature sensor connector is wet due to any reason, including leakage. 2. Replace the defected the DHW Inlet thermistor. 3. Check the DHW Inlet thermistor wire connection. 4. Check for any abnormalities in the DHW Inlet thermistor. 5. If the issues continue despite checking the items above, replace the PCB.

5.2.18 441 Error

Error occurrence conditions and check items

Error	Description
E441 DHW outlet 2 thermistor open or short circuit	1. If the DHW outlet 2 thermistor 10 bit AD value is lower than 50 for more than 3 seconds, "E441" will be displayed on the front panel. 2. If the DHW outlet 2 thermistor 10 bit AD value is higher than 1012 for more than 3 seconds, "E441" will be displayed on the front panel.
Check items	1. Check if the DHW Outlet 2 temperature sensor connector is wet due to any reason, including leakage. 2. Replace the defected the DHW outlet 2 thermistor. 3. Check the DHW outlet 2 thermistor wire connection. 4. Check for any abnormalities in the DHW outlet 2 thermistor. 5. If the issues continue despite checking the items above, replace the PCB..

5.2.19 445 Error

Error occurrence conditions and check items

Error	Description
E445 Abnormal operation: Mixing valve	1. If the feedback signal is not detected for more than 10 seconds continuously while the mixing valve is fully opened in conformity with the conditions (STEP 0), "E445-1" will be displayed on the front panel. 2. If the feedback signal is detected for more than 1 second continuously while the mixing valve is closed in conformity with the conditions and STEP 500 or higher, "E445-2" will be displayed on the front panel.
Check items	1. Check if the Mixing valve is wet due to any reason, including leakage. 2. Check the mixing valve and wire connections are secure. 3. Check the voltage on the PCB to verify proper power to the valve. If there is no voltage, replace PCB. 4. If issue persists, replace the Mixing valve.

5.2.20 515 Error

Error conditions and Check Items

Error	Description
E515 Relay feedback (PCB) error	This function determines abnormal operation in the controller and displays the controller error message (E515/E615) in case of an abnormal MCU operation (RAM, ROM, stack malfunctions etc.) or inner circuit malfunctions (resistance, TR etc.). • If the WD feedback value is detected in an error state for more than 1.5 seconds during the WD check state, an error occurs and the boilers goes into lock-out mode. • If abnormal WD-RSS2 operation (E515/02-sub) occurs, the boiler automatically clears 2 times and determines an error on the 3rd time. (Abnormal operation count is cleared after normal operation or error message.) • If the oil pump feedback signal is detected as a pulse for more than 1.5 seconds during the operating states (state 45, 46, 47, 51) when the oil pump is running, error (E515/03-sub) occurs and the boilers goes into lock-out mode. • If abnormal monitoring device operation (515/10-sub) occurs, the boiler automatically clears 2 times and determines an error on the 3rd time. (Abnormal operation count is cleared after normal operation or error message.) When the monitoring device error (E515/10-sub) is automatically cleared MCU2 circuits.
Check items	1. Defective PCB. 2. Check with a multi-meter if the PCB is supplied with the proper voltage (AC 216.2–253 V). 3. Check the wire connection. 4. Disconnect the ground wire, then check the PCB.

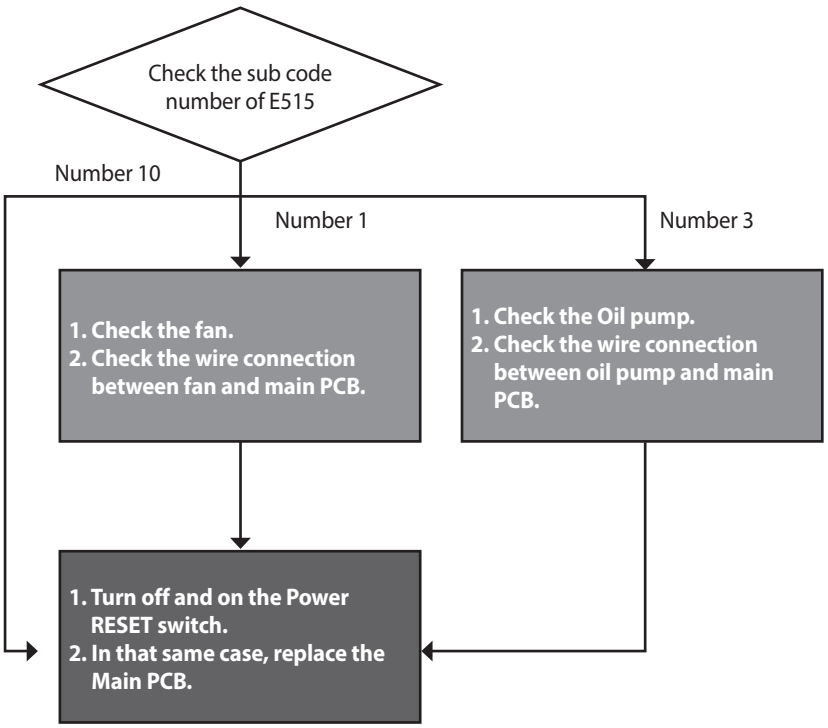

Check method

Fault	Possible Causes	Check method
PCB or Electrical supply	Defective PCB	Replace the PCB if there is an error with the PCB internal circuit.
	Power supply error	Check with a multi-meter if the PCB is supplied with the proper voltage. • Check with a multi-meter if the voltage at the electrical outlet is AC 216.2–253 V.
	Power supply grounding noise	Power supply grounding noise causes malfunction. • Disconnect ground from the grounding terminal inside the unit, and check if the PCB is operating normally.

5.2.21 517 Error

Error conditions and Check Items

Error	Description
E517 DIP switch setting (PCB) error	Check for abnormal DIP switch settings when turning on the boiler. If there is no abnormal DIP switch operation no error message will be displayed.

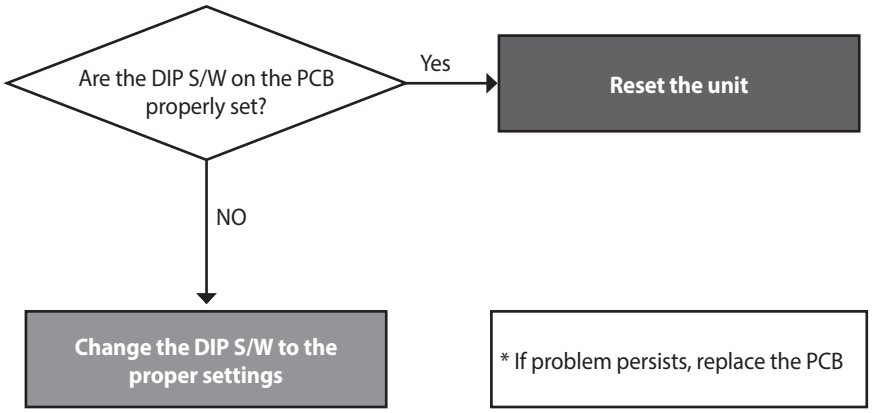

5.2.22 594 Error

Error conditions and Check Items

Error	Description
E594 EEPROM (PCB) error	If the communication is abnormal in parts of PCB, the system displays E594 on the PCB
Check items	Check the PCB.

Check method

Fault	Possible Causes	Check method
E594 Error	Abnormal communication by PCB	1. Click the Reset button on Front panel. 2. Turn the POWER to the unit OFF then ON. Disconnect then reconnect power if necessary. 3. If the system still displays E594, replace the main PCB.

5.2.23 615 Error

Error occurrence conditions and check items

Error	Description
E615 Input and memory (MCU) error	Abnormal signal input by PCB.
Check items	1. Turn the POWER RESET switch OFF then ON (or unplug and replug the power supply. 2. If the system still displays E615, replace the main PCB.

5.2.24 740 Error

Error conditions and Check Items

Error	Description
E740 Outdoor temperature sensor error	If an error (under 2.2kΩ or over 122.2kΩ) in the outdoor sensor is detected continuously for 3 seconds, The system displays the error message E740 on the front panel. If this occurs, do not perform functions that use the outdoor temperature sensor (Outdoor Reset, WWSD).
Check items	1. Check the parameter setting 2. Check the outdoor sensor.

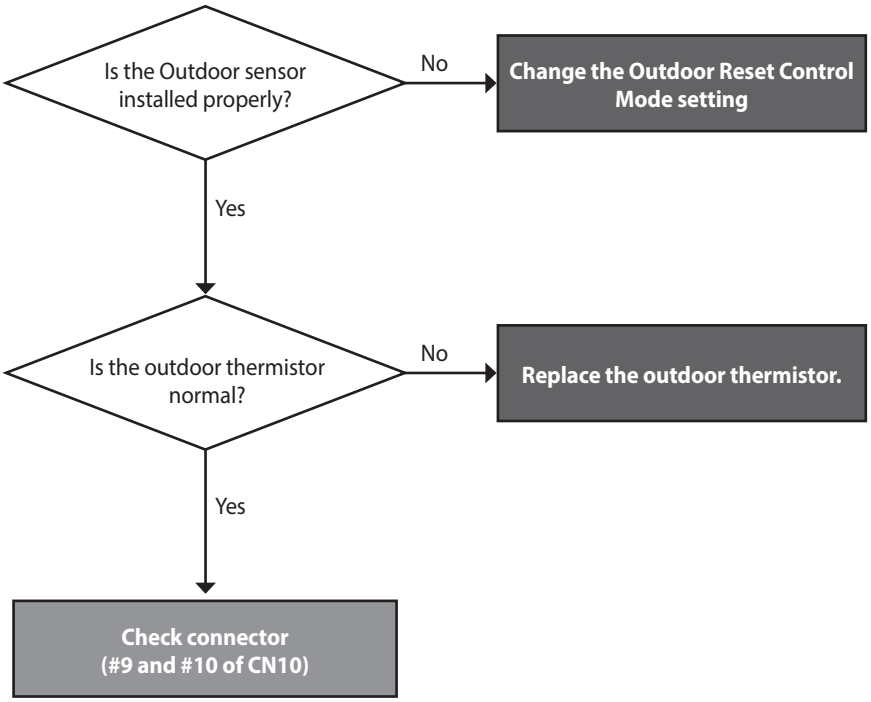

5.2.25 782 Error

Error occurrence conditions and check items

Error	Description
E782 Main panel communication error	If a communications error between the main controller and front panel continues over 60 seconds.

Error occurrence conditions and check items

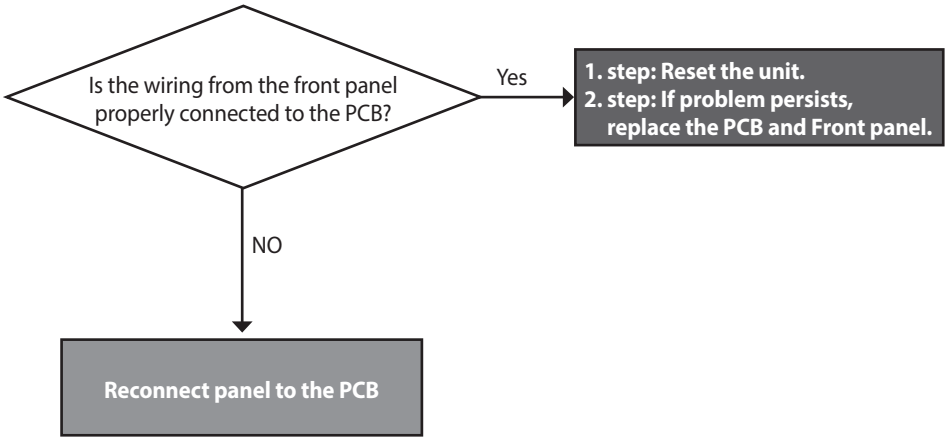

5.2.26 783 Error

Error occurrence conditions and check items

Error	Description
E783 OpenTherm remote control error	Abnormal room control operation occurs when the main controller does not receive a signal for more than 10 consecutive seconds while the panel's heat demand setting is configured to "Open Therm". (An error occurs as both open circuits and short circuits)

6. Key Components Description

6.1 Heat Exchanger Assembly

Item	Description
Heat exchanger	Stainless condensing single body heat exchanger
Maximum operation pressure	3.0bar
Type	Fire tube type

Classification	21㎾	28㎾	36㎾
Size	Φ270 × 517H	Φ270 × 517H	Φ300 × 517H
Water Capacity	14.0ℓ	13.5ℓ	16.4ℓ
Tube Plate	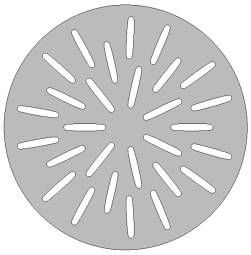	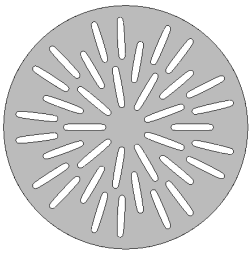	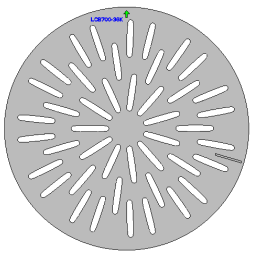
Fire Tube	28ea	36ea	44ea
High limit stat	PTS-12N/Off 95°C, On 80°C/Resistance range: < 1.0 Ω		

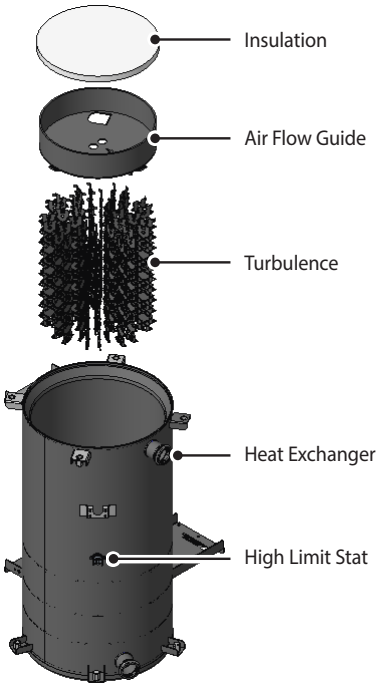

<Exhaust temperature according to turbulence status>

1. If turbulence falls down the heat exchanger

Item	Exhaust temp.
Normal	Over 70°C
No turbulence	Over 80°C

2. If no turbulence is installed in the heat exchanger, the condensate drain melts and may cause boiler damage and fire.

<Heat Exchanger Pressure Drop>

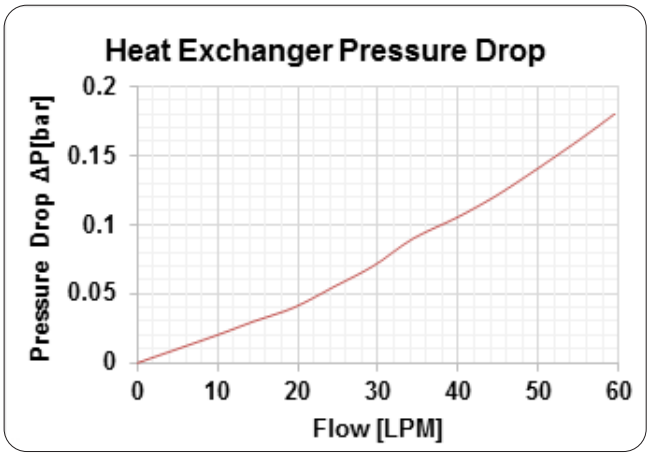

6.2 Burner Assembly

Item	Description
Burner	Blue Flame Oil Burner
Combustion type	Downward reverse combustion type
Fuel type	Kerosene, Light Oil
Control	2-Stage (High/Low)

Fuel usage		21kW		28kW		36kW	
Kerosene	Oil Nozzle	0.55G 80° ES		0.75G 80° ES		1.0G 80° ES	
	Low/High	Low	High	Low	High	Low	High
	Oil Pressure	6.5 bar	11.5 bar	6.5 bar	9.5 bar	6.5 bar	10 bar
Light Oil	Oil Nozzle	0.45G 80° S		0.55G 80° S		0.65G 80° S	
	Oil Pressure	9.5 bar	13.5 bar	9.5 bar	14 bar	9.5 bar	14 bar

<Assembly>

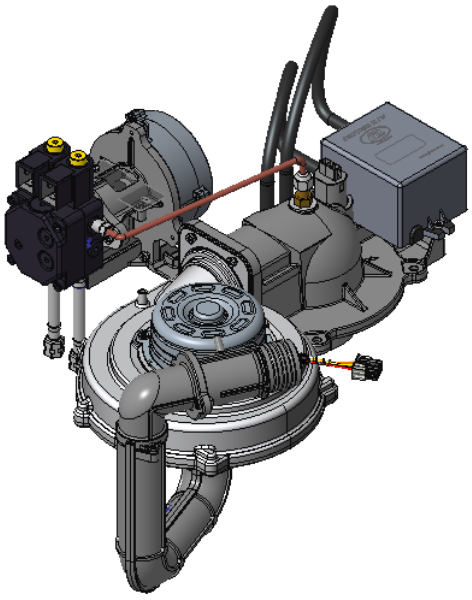

<Disassembly>

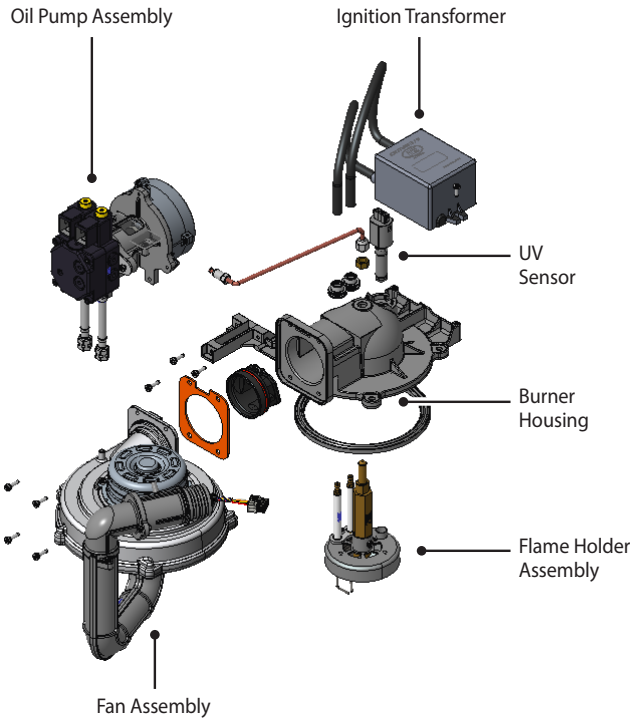

6.3 Oil Pump Assembly

Item		Description
Oil Pump	Type	2-Stage Control, BFP 52E-3, Danfoss
	Operating Speed	3,000rpm
	Max. starting Torque	0.1 Nm
Coupling		Oldham Coupling, Φ20, POM
Oil Pump Motor		BLDC Motor, CCW, 41W
Flexible Oil Hose		NBR, 7/16"-20 UNF

<Assembly>

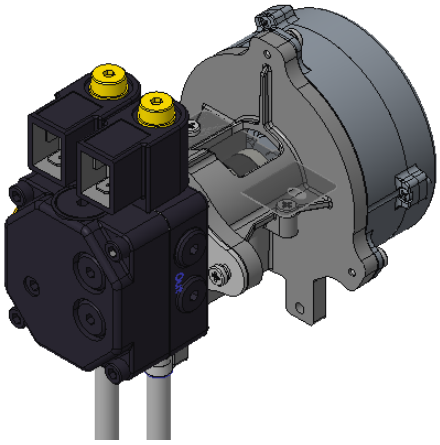

<Disassembly>

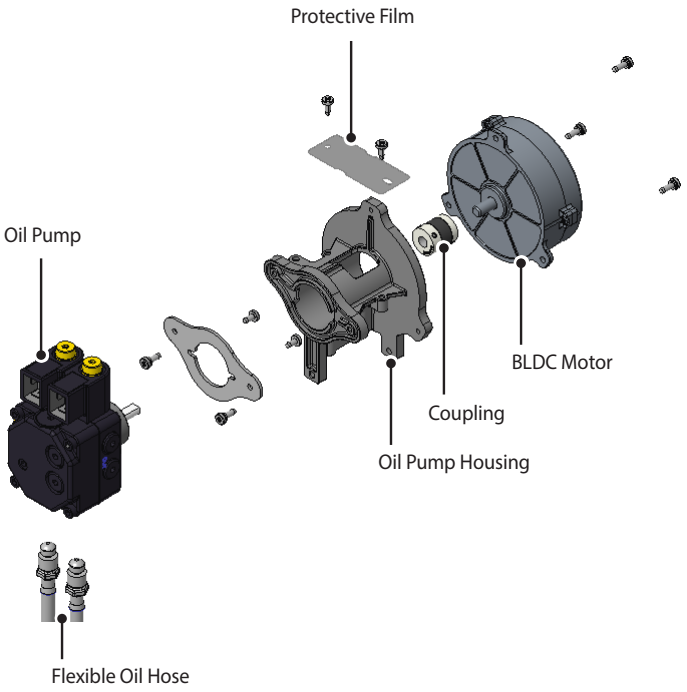

6.4 Ignition Transformer

Item	Description
Input	AC230V/50Hz/Max. 50W/Min 100MΩ
Output	18kV/40mA/10–22kHz

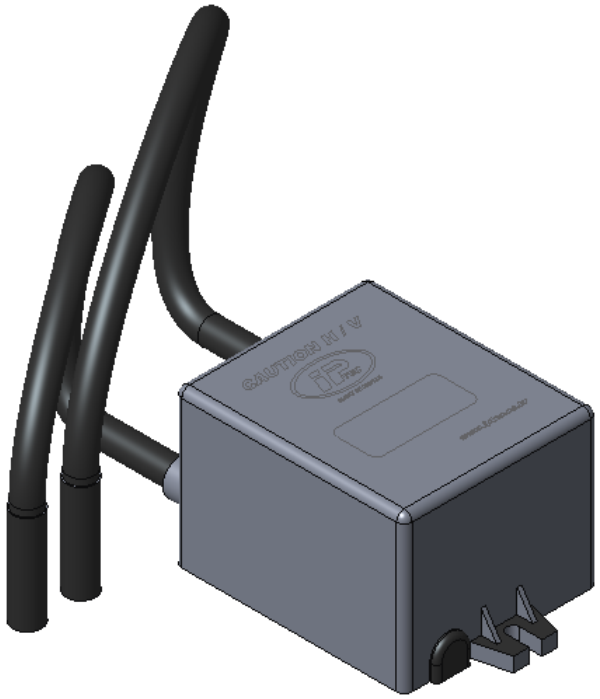

6.5 Circulation Pump

Item	Description
Model	UPM3 FLEX AS 15-75 CIL3/Grundfos
Power Consumption	2–60W
Max. Head	7.5m

Dimensions

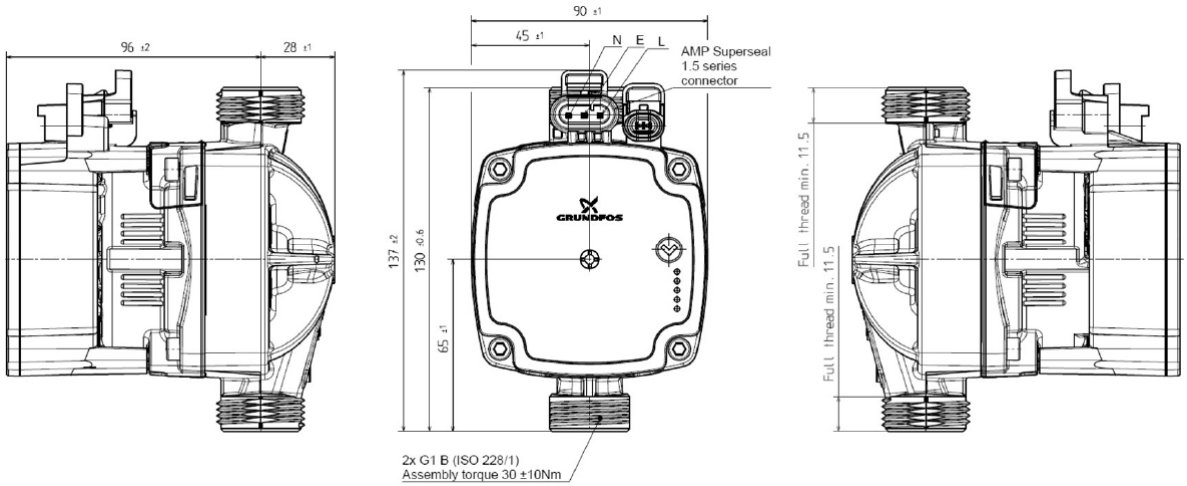

QH Chart

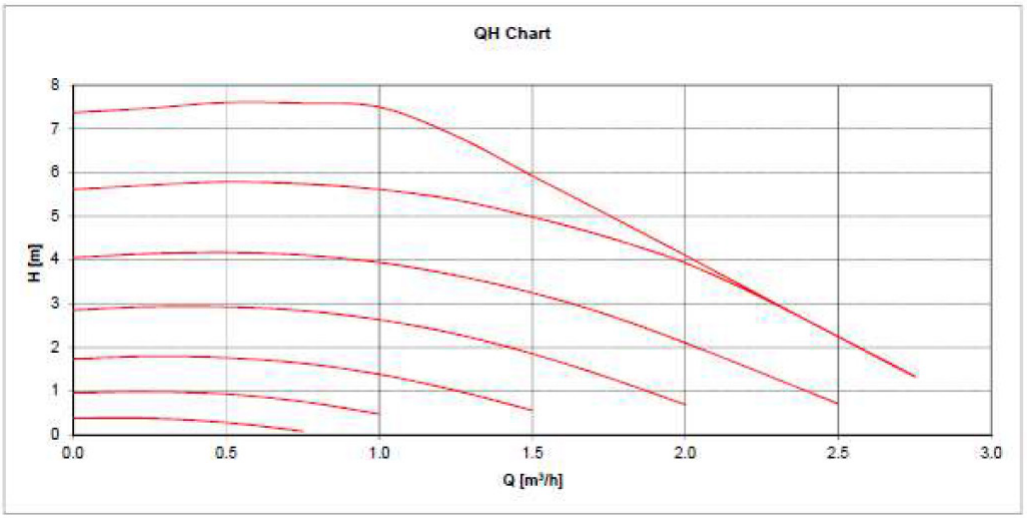

6.6 Expansion Vessel

Item	Description
Capacity	12 Liters
Max. Operating Pressure	3.0 bar
Pre Charge	1.0 bar

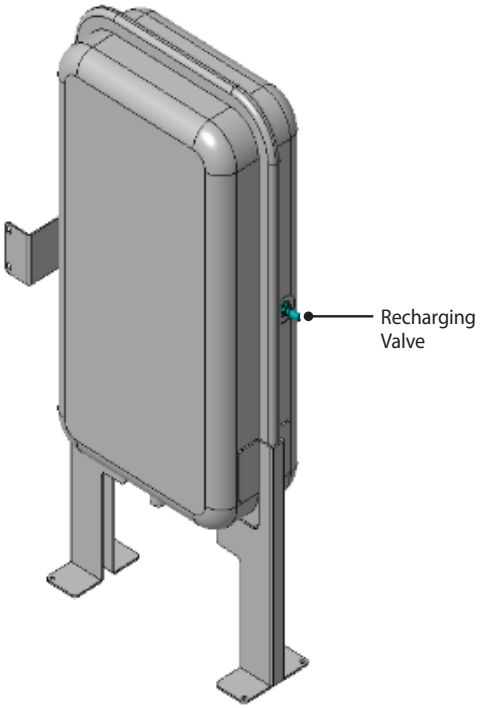

6.7 Inlet Adaptor Assembly

Item	Description
Pressure Sensor	0–4.5bar/Marquardt
Pressure Relief Valve	3bar/Caleffi
Temperature Sensor	-20–100°C
Drain Valve	1/2"

<Assembly>

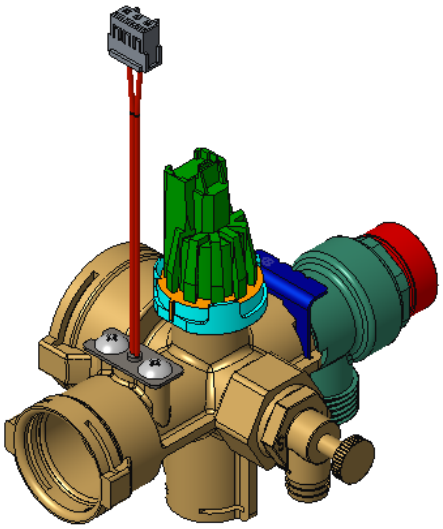

<Disassembly>

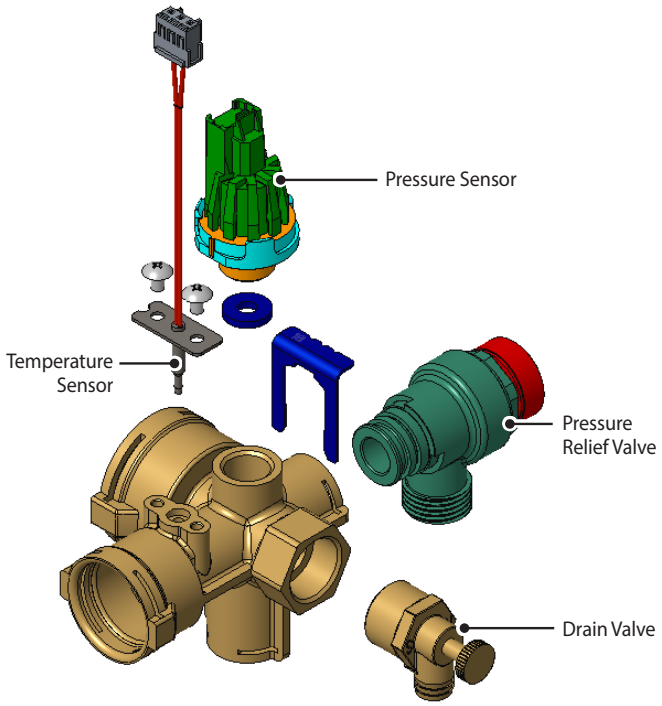

6.8 Outlet Adaptor Assembly

Item	Description
Air Vent	0–4.5bar/Marquardt
Pressure Gauge	Measuring range: 0–4bar
Temperature Sensor	-20–100°C

<Assembly>

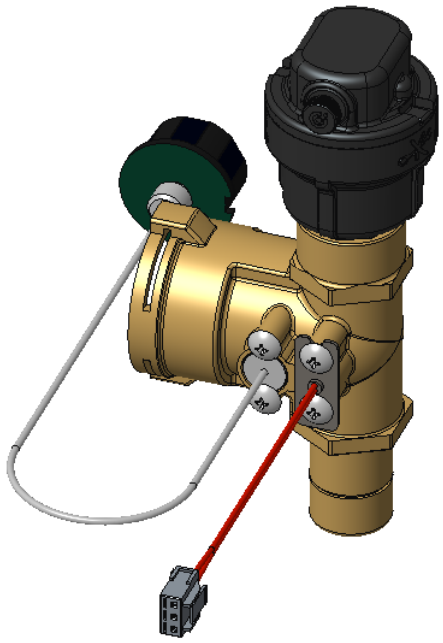

<Disassembly>

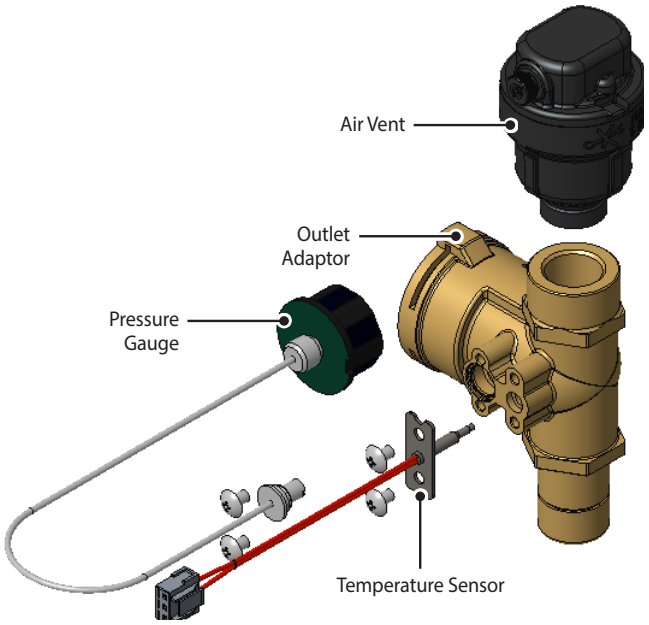

6.9 Main Controller

Item	Description
Model	COMBI: OBC801
Power	AC 230V 50Hz
Communication	Front Panel: UART communication
	OT communication: exterior signal input

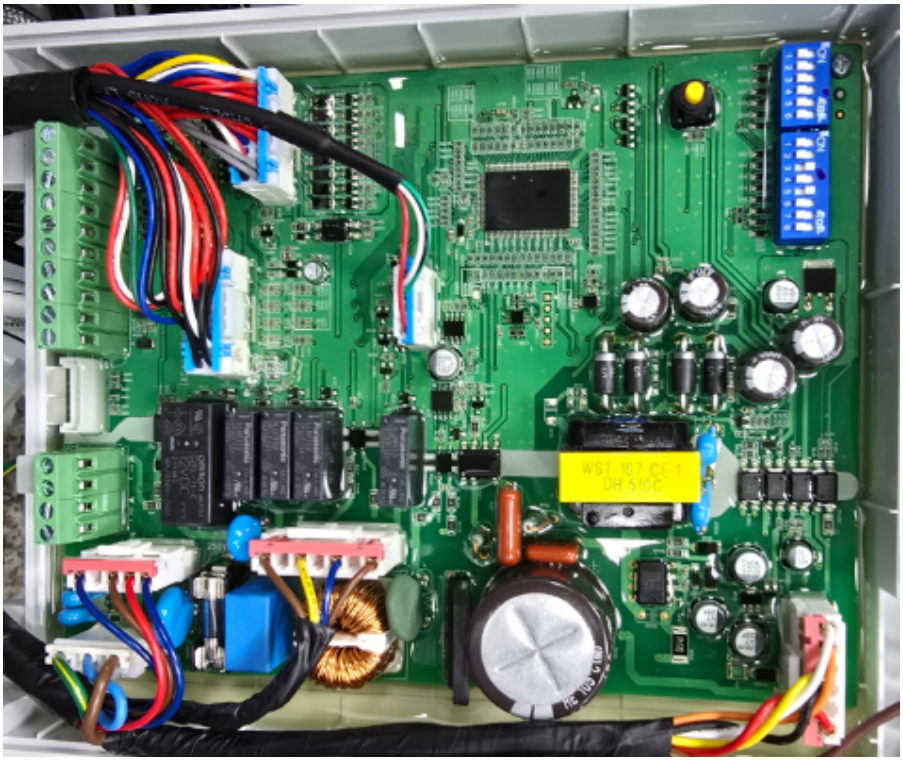

6.10 Front Panel

Item	Description
Model	COMBI: OBC801
Power	DC 24V
Controller communication	UART communication
	

6.11 Heat Exchanger for How Water Supply

Item	Description
Plate Material	STS
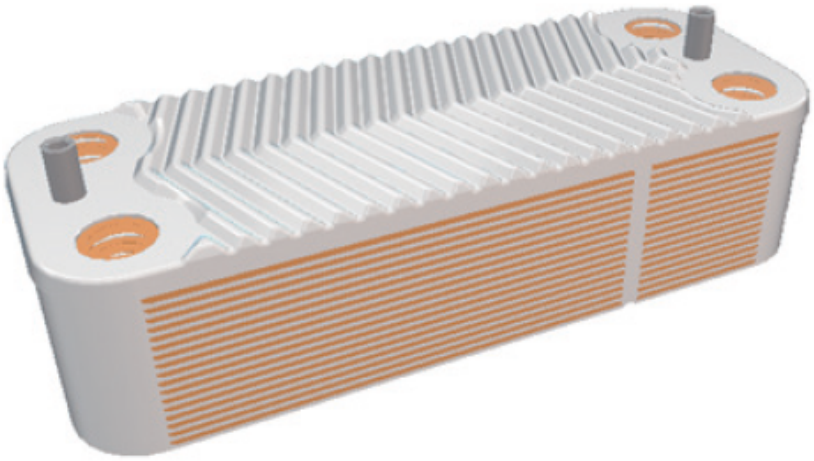	

6.12 Flow Control Valve

Item	Description
Power (Motor)	DC 12 V
Feature	Integral flow sensor
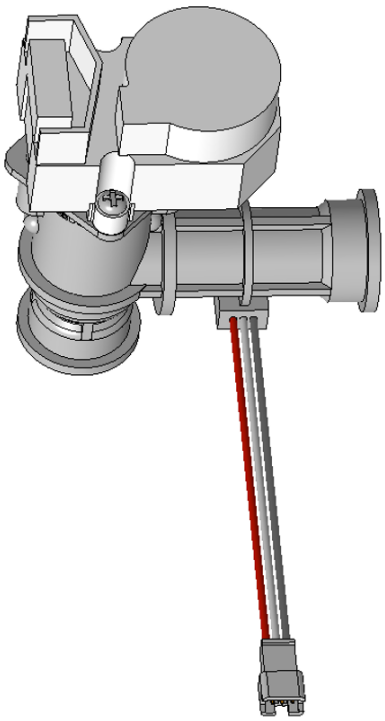	

6.13 Mixing Valve

Item	Description
Power (Motor)	DC 12 V
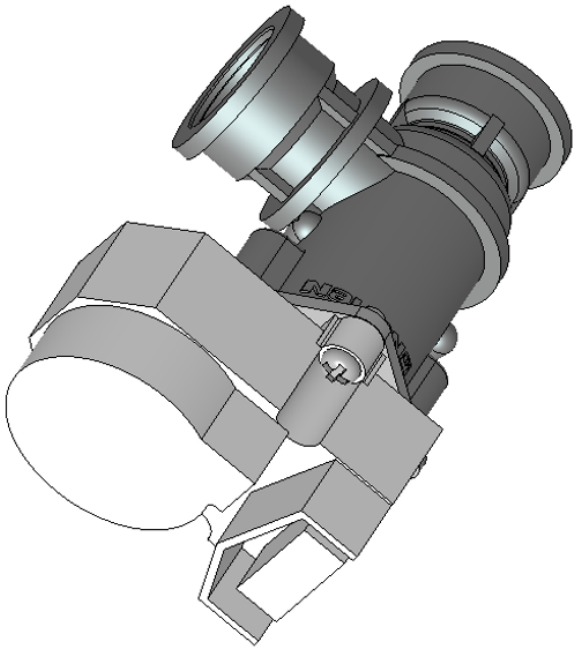	

6.14 3-Way Valve

Item	Description
Power	AC 220 V (50 Hz, 60 Hz)
Wire Configuration	Hot water: RED-BLACK, Heating: BLUE-BLACK

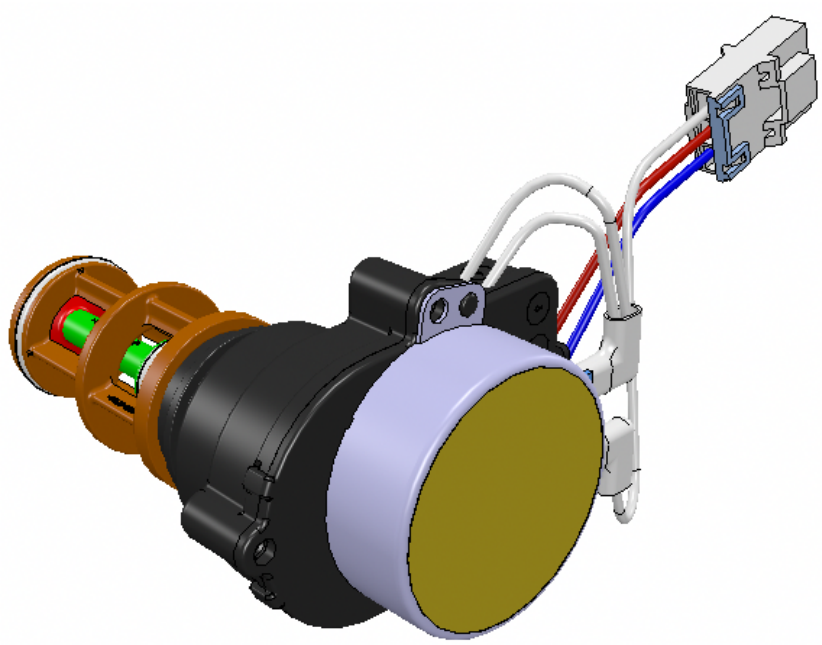

6.15 APS

Item	Description
Operating Pressure Range	0–25 mmH_2O
Wire Configuration	Red – Black: DC 5 V White – Black: DC 0.3–4 V

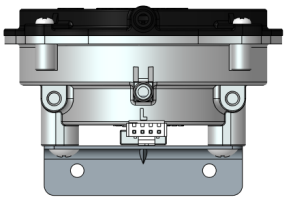

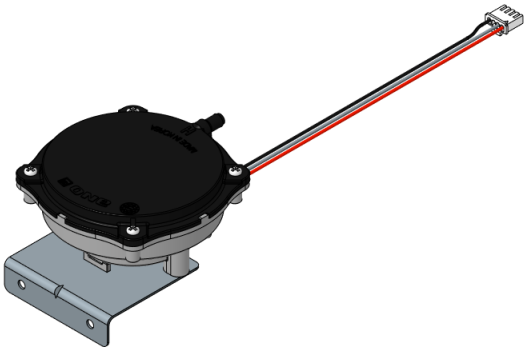

7. Replacement of Parts

7.1 Replacement Procedure

CAUTION

1. When performing maintenance and/or servicing the boiler, always turn off the electric power, oil and water shut-off valve. Wait for the boiler to become cool. Be careful to avoid injury to your fingers on sharp edges.
2. Drain all water from the boiler when removing the waterway components.
3. Before any disassembly, make sure that all issues and error codes are properly diagnosed.
4. Handle all parts carefully.
5. When reassembling, prevent any foreign substance, i.e. dust, etc. from entering back into the boiler.
6. Check the burner connections, combustion chamber cover, condensate trap, and exhaust duct for exhaust gas leaks.
7. Check the performance and operation after the boiler has been serviced.

When performing maintenance, use appropriate tools to disassemble and reassemble the boiler. A flashlight and magnetic tip are also recommended. Navien recommends the use of a parts tray to hold small parts and screws. All of the hardware is essential to the proper operation of the unit upon re-assembly.

Note When disassembling and reassembling the boiler, refer to the components diagram & parts list.

7.2 Components Replacement Instructions

CAUTION

When performing maintenance and/or servicing the boiler, always turn off the electric power, shut off the water valve, and disconnect it from the fuel source. Do not clean or perform maintenance without disconnecting fuel or power from the boiler. Doing so may result in electric shock. The boiler may remain hot for several minutes after it is turned off. To prevent burns, wait until the boiler has cooled down before cleaning.

7.2.1 Main Controller

1. Remove the upper-front cover from the boiler by pulling it toward you.

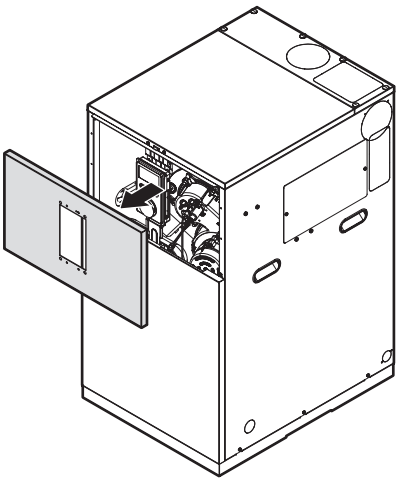

2. Remove the two screws securing the lower-front cover, and then remove the cover from the boiler.

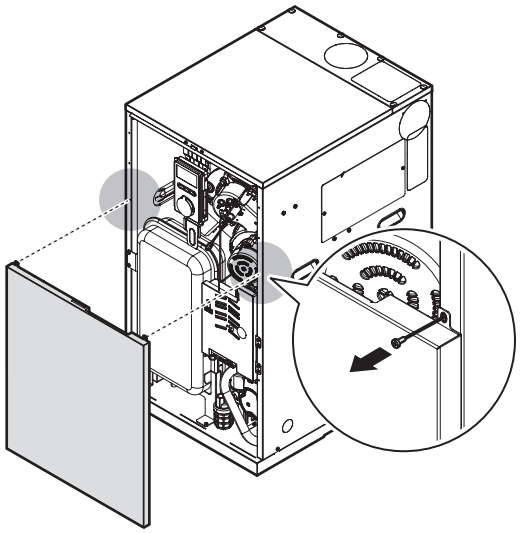

3. Remove the six screws from the controller, then remove the controller cover.

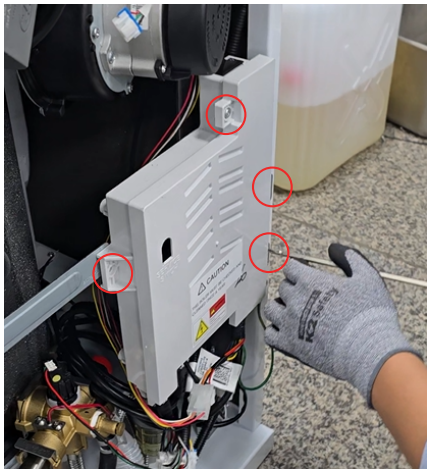

4. Disconnect all harness connections from the controller, then connect them to the replacement controller.



5. Reinstall the controller cover and secure it with the six screws.
6. Place the lower-front cover onto the boiler and secure it with the two screws.
7. Place the upper-front cover onto the boiler and press it firmly into position.
8. Open the oil valve and turn the power on.

Note Make sure the harness is connected to the correct position. Do not use excessive force during disassembly and reassembly, as this may damage the harness or PCB.

7.2.2 Front Panel

1. Remove the upper-front cover from the boiler by pulling it toward you.

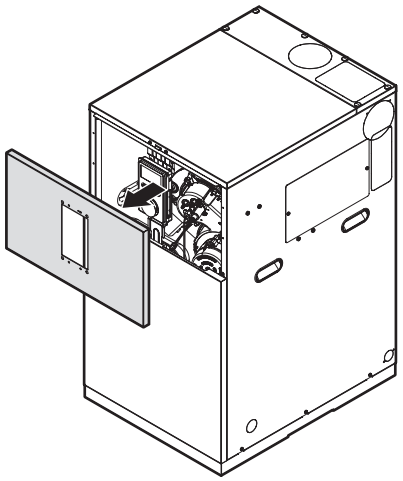

2. Disconnect the harness from the front panel.



3. Remove the four screws securing the front of the fixing bracket to the boiler, then remove the bracket and front panel assembly from the boiler.

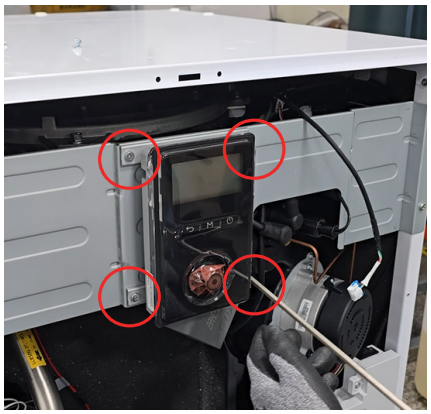

4. Remove the four screws securing the back of the fixing bracket to the front panel, then separate the bracket from the front panel.

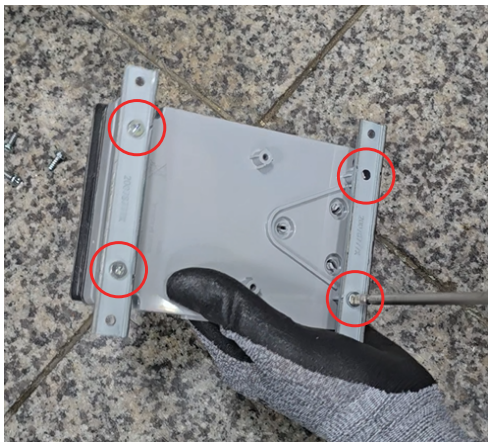

5. Install the fixing bracket onto the replacement front panel and secure it with the four screws.
6. Install the front panel with the fixing bracket onto the boiler and secure it with the four screws.
7. Place the upper-front cover onto the boiler and press it firmly into position.
8. Open the oil valve and turn the power on.

7.2.3 Oil Nozzle

1. Remove the upper-front cover from the boiler by pulling it toward you.

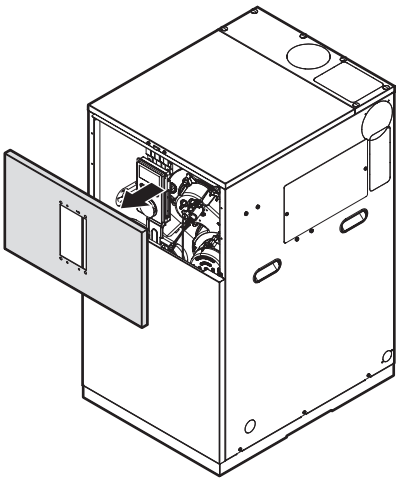

2. Remove the two screws securing the lower-front cover, and then remove the cover from the boiler.

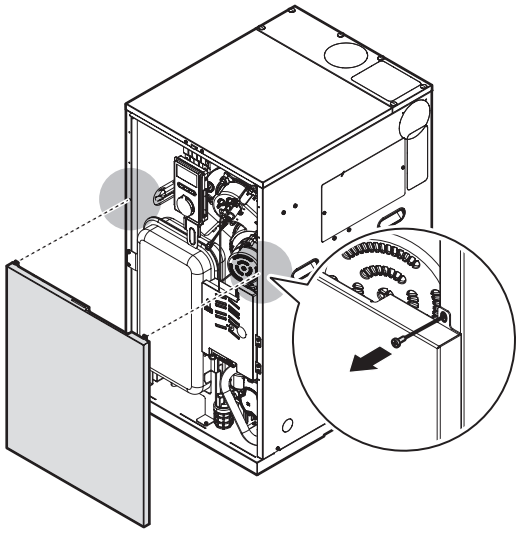

3. Disconnect the harness connected to the ignition transformer, then remove the ignition transformer.
4. Disconnect the harness connected to the fan, then remove the fan from the boiler.

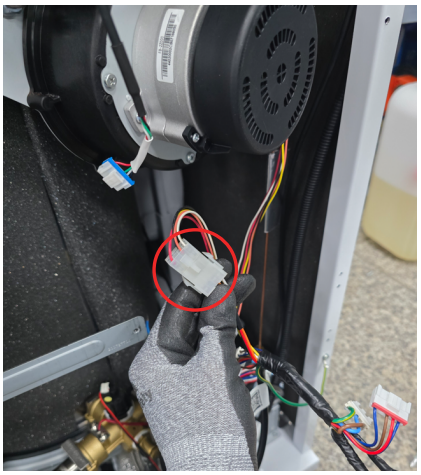

5. Remove the brass pipe and the flame detector.

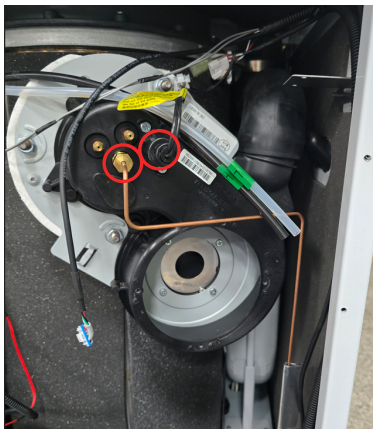

6. Remove the three screws securing the burner case, then remove the burner case.

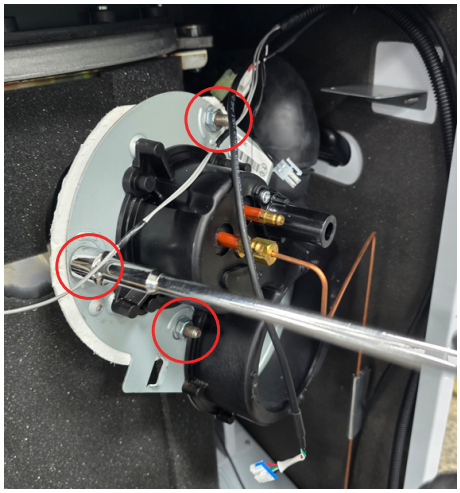

7. Remove the four screws securing the flame holder assembly, then remove the assembly.

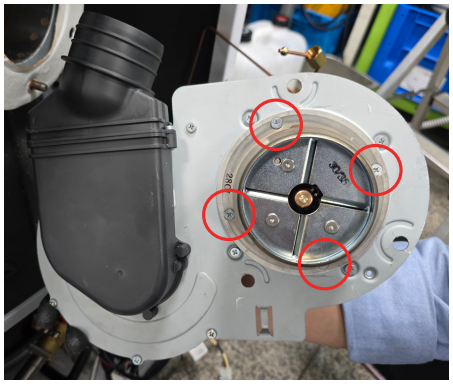

8. Remove the screws securing the inner tube to the electrode rod and the bracket, then remove the oil nozzle.

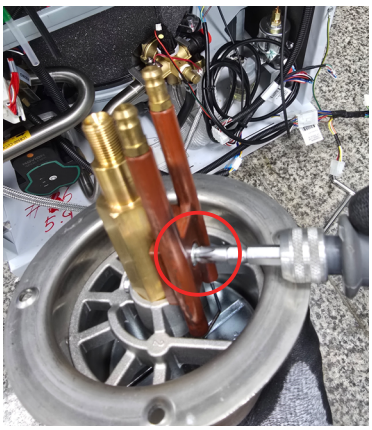

9. Replace the oil nozzle.

10. Reassemble in reverse order with the replacement oil nozzle.

7.2.4 APS

1. Remove the upper-front cover from the boiler by pulling it toward you.

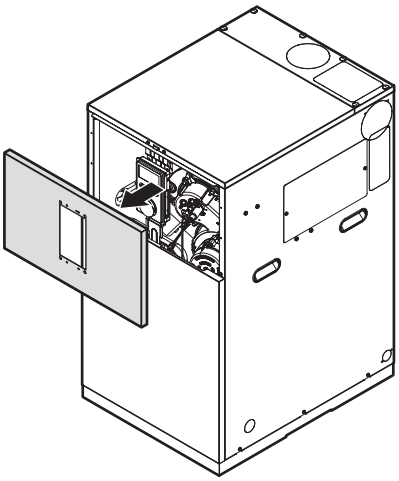

2. Remove the two screws securing the lower-front cover, and then remove the cover from the boiler.

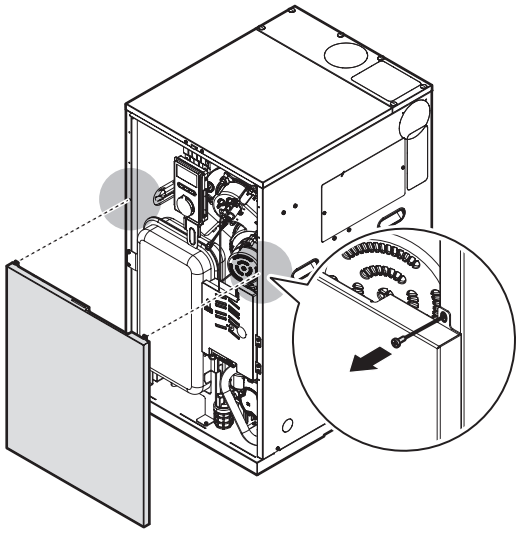

3. Remove the two screws securing the bracket located under the APS.

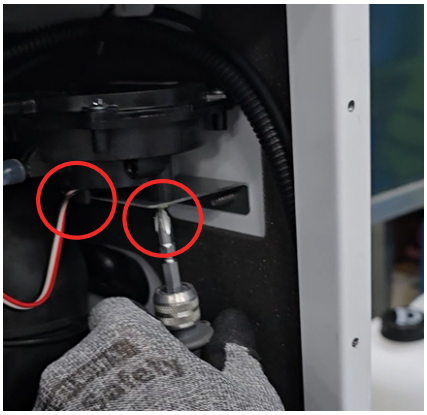

4. Disconnect the two hoses from the APS, then replace the APS.



5. Reassemble in reverse order with the replacement APS.

8. Inspection and Maintenance Schedule

8.1 Annual Servicing

In order to maintain its safe and efficient operation, it is recommended that the boiler is serviced annually.

CAUTION

The boiler should be inspected annually only by a qualified service technician. Failure to service and maintain the boiler and system could result in equipment failure.

Inspection

- Visual inspection for general signs of corrosion
- Checking and adjusting the oil/air ratio
- Checking Flue Gas
- Carrying out a Water Leak Test in Operation
- Carrying out an oil leak test in operation
- Checking Hot Water Temperature and Flow
- Checking Noise
- Checking flue systems
- Checking the PCB and Panel

Maintenance

- Draining the boiler and cleaning the inlet water filter
- Cleaning the Return Filter
- Cleaning the intake air filter
- Flushing the heat exchanger
- Replacement of parts

8.2 Maintenance Schedules

Owner maintenance	
Daily	• Check boiler area • Check pressure/temperature gauge
Monthly	• Check flue piping • Check condensate drain
Periodically	• Check flue termination screens
Every 6 months	• Check boiler piping (oil and water) for leaks
Non-heating season	• Shut boiler down (unless boiler used for domestic hot water)

Service technician (See the following instructions)	
Annual Start-up	General: • Address reported problems • Inspect interior; clean and vacuum if necessary • Clean condensate trap and fill with fresh water • Check for leaks (water, oil, flue, condensate) • Verify flue and air lines are in good condition and sealed tight • Check system piping • Check control settings • Check ignition and UV sensor (clean and reposition) • Clean oil filter • Replace old flexible oil hose and oil nozzle with new ones • Check wiring and connections If combustion or performance indicate need: • Clean heat exchanger • Remove and clean return adaptor filter

8.3 Maintaining the Boiler

8.3.1 Cleaning the Boiler

> **CAUTION**
>
> Make sure the boiler is turned off and the power supply is disconnected before cleaning the boiler. The boiler may remain hot for several minutes after it is turned off. To prevent burns, wait until the boiler has cooled down before cleaning.

To clean the boiler, wipe the outside with a damp cloth. Use a non-acidic, non-abrasive cleaner to remove any surface stains. The front panel is moisture resistant, but it is not waterproof. Keep it as dry as possible.

8.3.2 Draining the Boiler

You will need to drain either both the central heating side and domestic hot water (DHW) side, or one side only before performing maintenance tasks, such as cleaning the adaptor filter, or to prevent the boiler from freezing when it will not be used for an extended period.

Refer to "2.6 Dimensions" on page 19 for details about part locations.

To drain the boiler:

1. Place a bucket under the boiler, to collect the residual water inside the boiler.
2. Press the Power button (⏻) on the front panel to turn off the boiler.

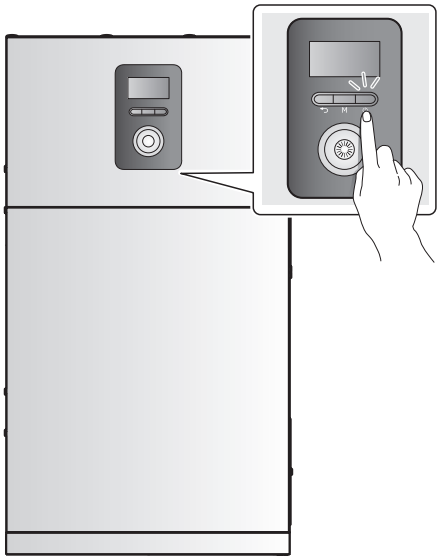

3. Disconnect the power supply from the boiler.
4. Close the oil line valve.

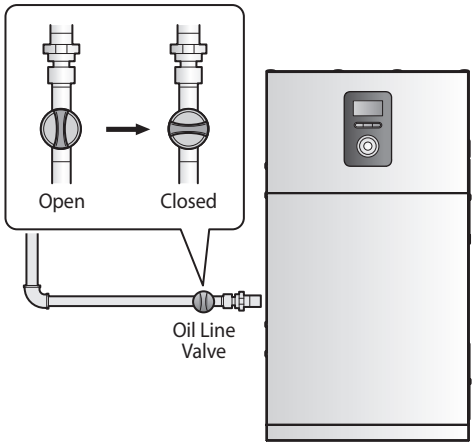

5. Close the water supply valve on the inlet to the boiler. If there is no valve, turn off the water supply at the water main.

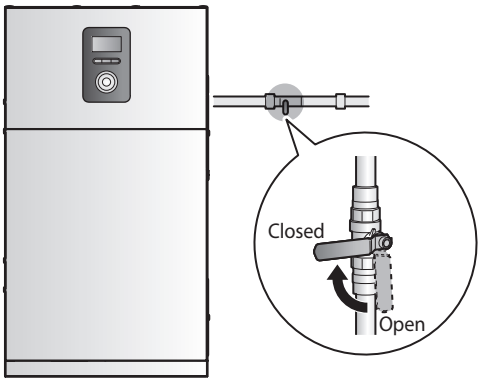

6. Close off any heating zones that do not require draining and open a drain valve to drain the central heating side.

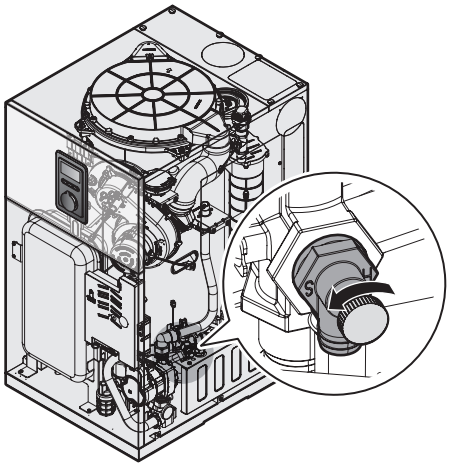

7. Open all domestic hot water taps completely to drain the water heating side. The water that remains in the plumbing lines will drain out.
8. Open the pump drain valve.
9. Allow the residual water to drain from the boiler.
10. When the water is completely drained out, close the drain valve.

Note To refill the boiler, follow the steps above in reverse.

8.4 Protecting the Boiler from Freezing

CAUTION

Damage due to freezing is not covered by the Navien limited warranty.

If the boiler is connected to a circuit that could freeze, the circuit pipes must be suitably insulated. All pipes installed outdoors must be insulated according to applicable legislation. The boiler electronic control includes a freeze protection function that prevents the boiler from freezing in very cold weather. It remains on standby and takes priority over all other boiler functions while the boiler is connected to the electrical mains and oil supply, i.e. it remains enabled even when the boiler is in standby position.

To ensure that the boiler does not freeze, follow these guidelines:

- **Do not unplug the power supply cord**, except for routine maintenance. The boiler has a freeze protection function that requires electricity. The freeze protection function will operate regardless of whether or not the power is turned on or off, as long as the electric supply is still connected.
- **Do not close the oil valve**, except for routine maintenance, as this will limit additional freeze protection.
- **If the boiler will not be used for an extended period**, drain the boiler. If the power or oil supplies must be disconnected for an extended period, drain the boiler. Freezing damage may occur if there is water remaining in the boiler in cold weather.

If hot water will not flow and you suspect that the boiler is frozen, follow these steps:

1. Press the Power button (⏻) on the front panel to turn off the boiler.
2. Close the oil line valve.

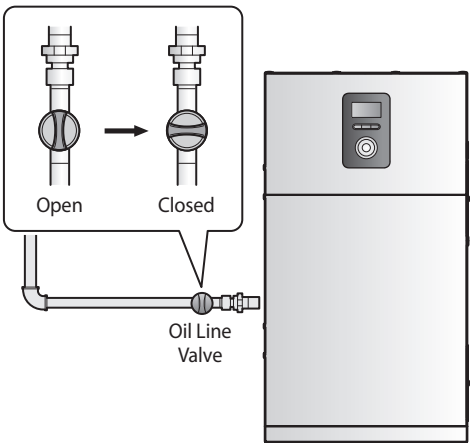

3. Open the hot water tap that is closest to the boiler.
4. Use a hair dryer or a portable electric heater to heat up both the primary and secondary heat exchangers.
5. Check every few minutes to see if water is running at the open tap.
6. When the water starts flowing again, check the boiler and piping for leaks. If you detect any leaks or the boiler is not operating properly, contact an authorised technician or licensed professional.

Note This boiler requires very little maintenance, however a qualified technician should inspect the boiler at the beginning of every heating season and/or when there is a problem.

8.5 Maintaining the Parts

⚠ WARNING

- Follow the service and maintenance procedures given throughout this manual and in component literature shipped with the boiler. Failure to perform the service and maintenance could result in damage to the boiler or system.
- Failure to follow the directions in this manual and component literature could result in severe personal injury or substantial property damage.
- The boiler should be inspected annually only by a qualified service technician. In addition, the maintenance and care of the boiler must be performed to assure maximum boiler efficiency and reliability. Failure to service and maintain the boiler and system could result in equipment failure.
- Electrical shock hazard – Turn off power to the boiler before any service operation on the boiler except as noted otherwise in this instruction manual. Failure to turn off electrical power could result in electrical shock, causing severe personal injury.

Addressing the Reported Problems

Inspect any problems reported by the owner and correct before proceeding.

Inspecting the Installation Area

1. Verify that boiler area is free of any combustible materials, petrol and other flammable vapours and liquids.
2. Verify that air intake area is free of any of the contaminants listed in Installation & Operation Manual. If any of these are present in the boiler intake air vicinity, they must be removed. If they cannot be removed, reinstall the air and flue lines per the Installation & Operation Manual.

Inspecting the Boiler Interior

1. Remove the front cover and inspect the interior of the boiler.
2. Vacuum any sediment from inside the boiler and components. Remove any obstructions.

9. Components Diagram and Part List

9.1 Base Parts

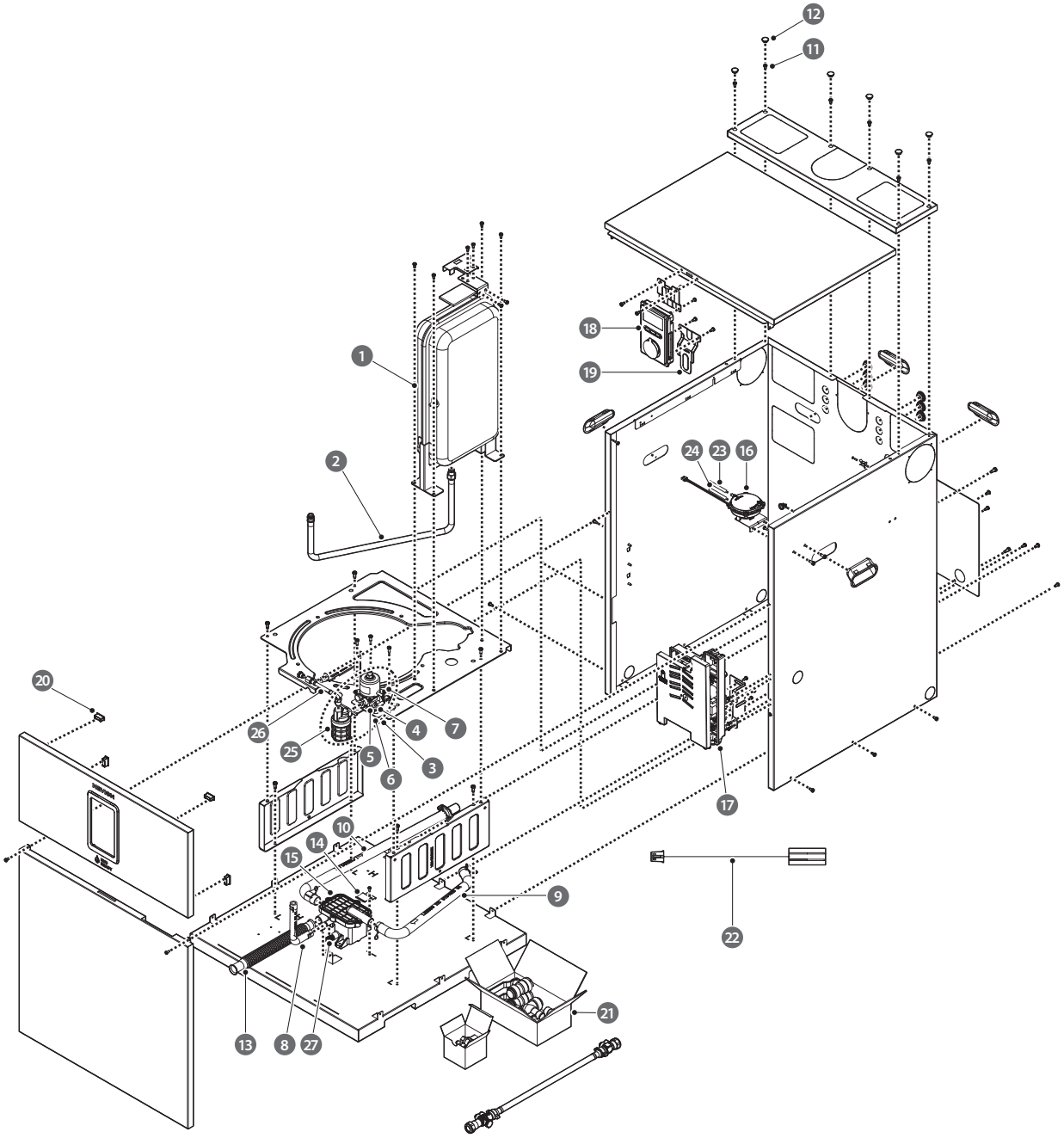

* Harness Details

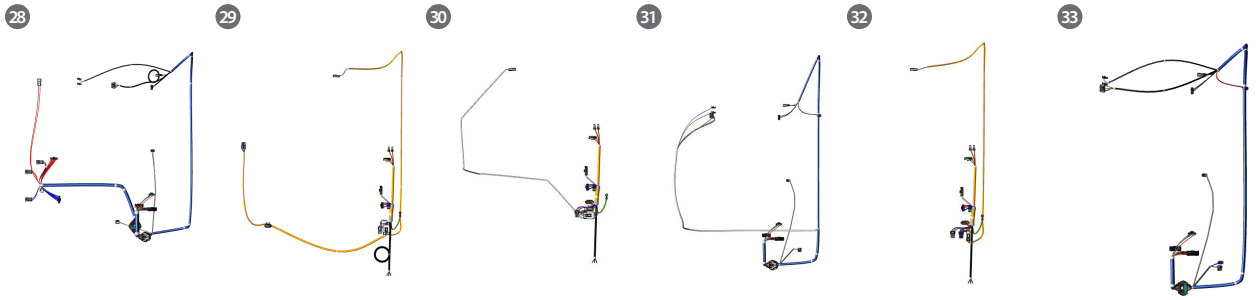

#	Description	Part #	Remark
1	Expansion tank (closed) 12L	30040440*	Combi/System
2	Flexible hose	30041430*	Combi/System
3	Solenoid pump	30041618*	Combi: 21L, System: 21L
		30041617*	Combi: 26L, System: 26L
		30041526*	Combi: 34L, System: 34L
4	Packing	20010248*	
5	Rubber bushing	20083322*	
6	Bolt	20087935*	
7	Bolt	20087934*	
8	Drain hose assembly	30041414*	Combi: 21L
		30041421*	Combi: 26L/34L
		30041993*	System
		30041457*	Regular: 21L
		30041458*	Regular: 26L/34L
9	Condensate water hose	30042327*	Combi Indoor
		30042328*	Combi Outdoor
		30030344*	System/Regular
10	Condensate water hose	30041401*	Combi: 21L
		30041426*	Combi: 26L/34L
		30042329*	System Indoor
		30042330*	System Outdoor
11	Screw	20038753*	
12	Packing	20041078*	Indoor
13	Hose	20043491*	
14	Bracket	20082728*	
15	Siphon	30041379*	
16	Air pressure sensor	30015811*	
17	Controller	30040436*	
18	Panel	30040746*	
19	Panel bracket	20083400*	Indoor
		20083402*	Outdoor
20	Door catch	20007678*	Outdoor
21	Valve kit	30041812*	Combi
		30022044*	System/Regular
22	Wire harness	30023873*	
23	Hose	20060538*	
24	Hose	20060691*	

#	Description	Part #	Remark
25	Oil filter	30004380*	
26	Flexible hose	20010104*	
27	Drain cock	30008630*	
28	Harness - sensor part	30040595*	Combi
29	Harness - live part	30040594*	Combi
30	Harness - sensor part	30041787*	System
31	Harness - live part	30041786*	System
32	Harness - sensor part	30041789*	Regular
33	Harness - live part	30041788*	Regular

9.2 Combustion Parts

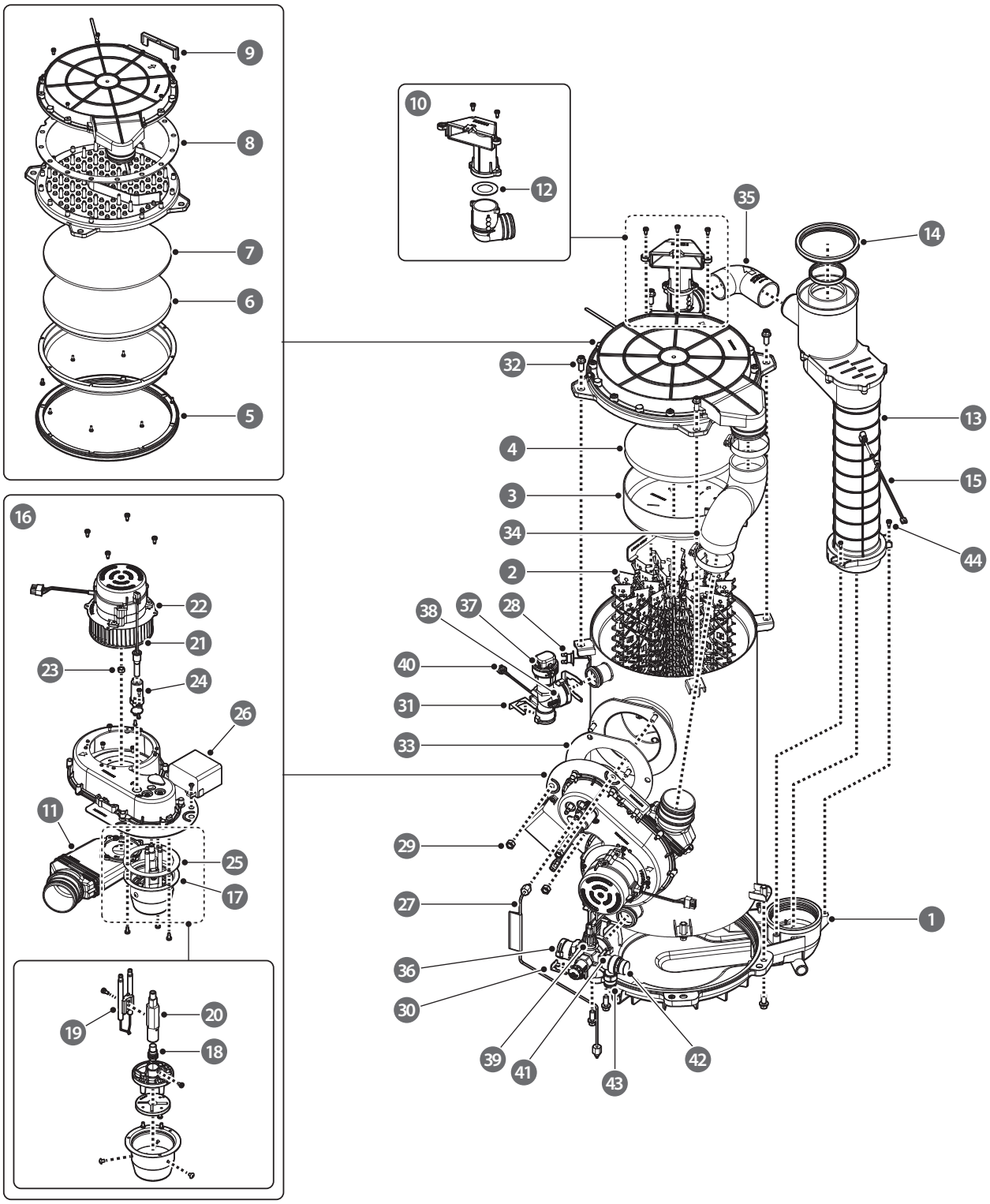

#	Description	Part #	Remark
1	Condensate water receiver assembly	30030339*	System: 21L, Regular: 21L
		30035175*	System: 26L/34L, Regular: 26L/34L
2	Turbulence	20071407*	
3	Air inlet guide assembly	30030591*	21L
		30034762*	26L/34L
4	Insulation	20043518*	21L
		20067436*	26L/34L
5	Burner gasket packing	20044609*	21L
6	Insulation	20058538*	21L
		20058539*	26L/34L
7	Gasket	20058540*	21L
		20058541*	26L/34L
8	Packing	20060906*	21L
		20067385*	26L/34L
9	Packing	20061606*	21L
10	Inlet pipe (Fan) for air supply	30041394*	21L
		30041450*	26L
		30041449*	34L
11	Inlet pipe (Fan) for inlet burner	30041428*	21L/26L
		30041429*	34L
12	Orifice	20077744*	21L
		20077765*	26L
		20068209*	34L
13	Exhaust duct assembly	30041395*	Combi: 21L
		30041433*	Combi: 26L/34L, System: 26L/34L, Regular: 26L/34L
14	Packing	20043645*	
15	Thermistor	30020489*	
16	Oil burner	30041407*	21L
		30041399*	26L
		30041400*	34L
17	Fuel intake assembly	30041472*	21L
		30041473*	26L
		30041475*	34L
18	Oil nozzle	20051176*	21L
		20051177*	26L
		20080179*	34L

#	Description	Part #	Remark
19	Flame lod	20051808*	
20	Inner tube	20082966*	
21	Flame sensor	30031619*	
22	Fan assembly	30031691*	
23	Nut	20003001*	
24	Bracket	30032564*	
25	Packing	20061424*	21L
		20066785*	26L/34L
26	Ignition transformer	30007701*	
27	Copper pipe assembly	30041396*	Combi: 21L
		30041432*	Combi: 26L/34L
28	High limit switch	30002557*	
29	Nut	20006583*	
30	Clip	20007732*	
31	Clip	20033662*	
32	Bolt	20087937*	
33	Packing	20061967*	
34	Tube	20078783*	Combi: 21L
		20078775*	Combi: 26L/34L
35	Hose	20078798*	Combi: 21L
		20078827*	Combi: 26L/34L
36	Primary heat exchanger inlet adaptor	30029115*	Combi/System
		30042368*	Regular
37	Primary heat exchanger outlet adaptor	30041945*	Combi
		30021072*	System/Regular
38	Air vent	30023752*	Combi
		30023517*	
39	Pressure sensor	30014699*	
40	Thermistor	30012907*	
41	Clip	20007837*	
42	Safety valve	30002251*	
43	Packing	20006852*	
44	Screw	20038753*	

9.3 DHW Parts

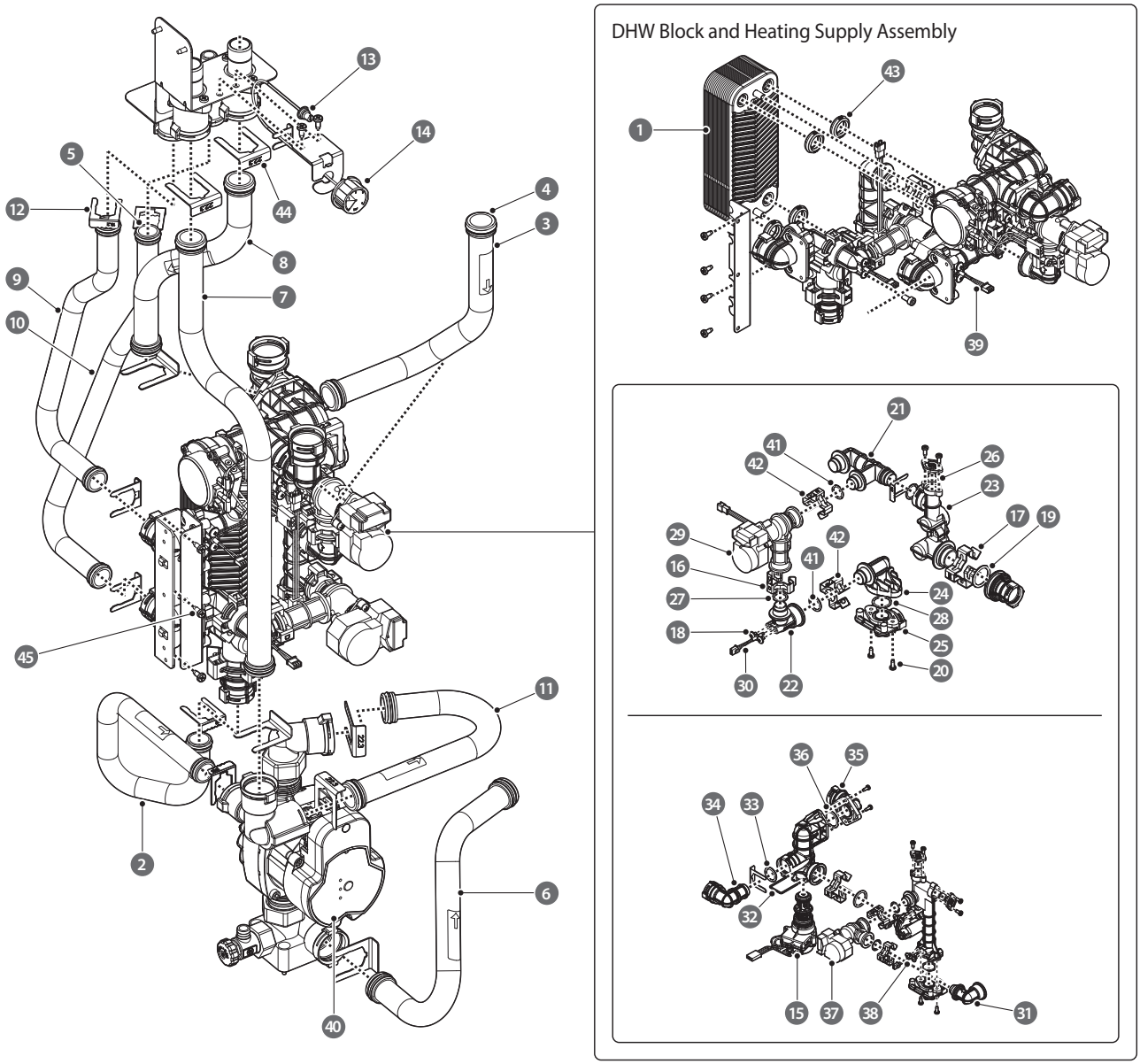
DHW Block and Heating Supply Assembly
1
2
3
4
5
6
7
8
9
10
11
12
13
14
15
16
17
18
19
20
21
22
23
24
25
26
27
28
29
30
31
32
33
34
35
36
37
38
39
40
41
42
43
44
45

#	Description	Part #	Remark
1	Heat exchanger plate	30024107*	Combi
2	Heating return pipe assembly	30041418*	Combi
3	Heat exchanger outlet pipe	30041410*	Combi: 21L
		30041409*	Combi: 26L/34L
4	Backup ring	20033703*	Combi: 21L/26L/34L, Regular: 26L/34L
		20055317*	System: 21L/26L/34L, Regular: 21L
5	O-ring	20003022*	Combi
6	Heat exchanger inlet pipe	30041422*	Combi Indoor: 21L
		30041419*	Combi Indoor: 26L/34L
		30041386*	Combi Outdoor: 21L
		30041385*	Combi Outdoor: 26L/34L
		30041463*	System: 21L
		30041464*	System: 26L/34L
		30041468*	System Indoor: 21L
		30041469*	System Indoor: 26L/34L
		30041480*	System Outdoor: 21L
		30041481*	System Outdoor: 26L/34L
7	Space heating return pipe	30041425*	Combi
8	Heating outlet pipe	30041420*	Combi
9	Outlet pipe	30041380*	Combi
10	Hot water inlet pipe	30041381*	Combi
11	Pump inlet pipe	30041384*	Combi
		30041471*	System
12	Clip	20007733*	Combi
13	Clip	20034617*	
14	Pressure gauge	30020258*	
15	3-way valve	30020637*	Combi
16	Clip	20007859*	Combi
17	Clip	20017724*	Combi
18	Screw	20017962*	Combi
19	O-ring	20032409*	Combi
20	Screw	20041461*	Combi
21	Adaptor	20044469*	Combi
22	Adaptor	20044470*	Combi
23	Adaptor	20044471*	Combi
24	Adaptor	20044477*	Combi
25	Adaptor	20047162*	Combi

#	Description	Part #	Remark
26	O-ring	20048004*	Combi
27	O-ring	20048005*	Combi
28	O-ring	20048007*	Combi
29	Water adjustment valve & flow sensor	30008247*	Combi
30	DHW temperature sensor (Blue)	30022207*	Combi
31	Adaptor	20025962*	Combi
32	Clip	20029414*	Combi
33	O-ring	20033699*	
34	Adaptor	20047160*	Combi
35	Adaptor	20047161*	Combi
36	O-ring	20062030*	Combi
37	Mixing water adjust valve	30011532*	Combi
38	Thermistor	30022222*	Combi
39	Thermistor	30023765*	Combi
40	Circulation pump	30036404*	Combi/System
41	O-ring	20048006*	Combi
42	Clip	20017726*	Combi
43	Packing	20047738*	Combi
44	Clip	20033662*	
45	Screw	20038753*	