NAVIEN

Installation & Operation Manual

Getting Service

If your boiler requires service, you have several options for getting service:

- Contact an official Technical Assistance Service (TAS) at 0344 332 2323 or go to the website (www.navien.co.uk).
  For warranty service, always contact an official Technical Assistance Service (TAS) first.
- Contact the technician or professional who installed your boiler.

When contacting an official Technical Assistance Service (TAS), please have the following information available:

- Model number
- Serial number
- Date purchased
- Installation location and type
- Error code, if any appears on the front panel display

Version: 1.0 (March, 2026)

KD NAVIEN
Navien LTD
Building 2, Guildford Business Park, Guildford, GU2 8XG
TEL 0344 332 2323 www.navien.co.uk

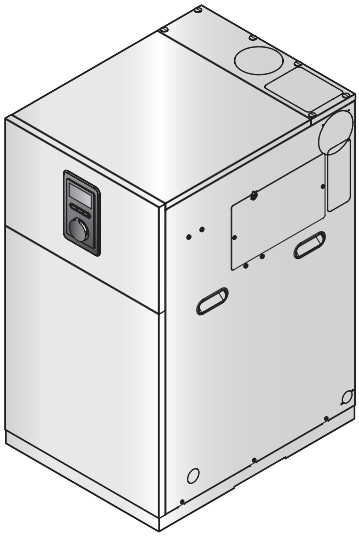

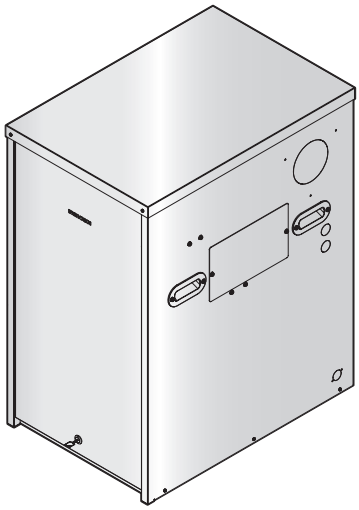

NAVIEN

Condensing Blue Flame Oil-Fired Boiler

Installation & Operation Manual

Installation Location	Type	Model
Internal	Regular	LCB500-21RI LCB500-26RI LCB500-34RI
	System	LCB500-21SI LCB500-26SI LCB500-34SI
	Combi	LCB500-21CI LCB500-26CI LCB500-34CI
External	Regular	LCB500-21RX LCB500-26RX LCB500-34RX
	System	LCB500-21SX LCB500-26SX LCB500-34SX
	Combi	LCB500-21CX LCB500-26CX LCB500-34CX

Keep this manual near this boiler for future reference whenever maintenance or service is required.

⚠ WARNING

If the information in these instructions is not followed exactly, a fire or explosion may result, causing property damage or personal injury.

- **Do not store or use petrol or other flammable vapours and liquids in the vicinity of this or any other appliance.**
- **Installation and service must be performed by a qualified installer or service agency.**

CE 1015 OFTEC™ ErP A

NAVIEN

Contents

1. Safety Information 3

2. About the Boiler 7

2.1 Items Included 7
2.2 Accessories 7
2.3 Service Tool 8
2.4 Specifications 9
2.5 Components 11
2.6 Dimensions 15

3. Installing the Boiler 17

3.1 Installation Procedure 17
3.2 Choosing an Installation Location 18

4. Installing the System Piping 20

4.1 Installing a Central Heating System 21
4.2 Installing a System Application 23
4.3 Connecting the Condensate Drain Line 26
4.4 Installing the Plinth (Optional) 27
4.5 Filling the System 27
4.6 Testing the Water System 29

5. Connecting the Oil Supply 30

5.1 Essential Elements in the Oil Supply 30
5.2 Connecting the Flexible Hose to the Fuel Pipe 31
5.3 Oil Supply 32
5.4 Oil Pump 33

6. Flue System 35

6.1 Flue Terminal Positions 35
6.2 Coaxial Systems 36
6.3 Measuring Flue Length 38
6.4 Wind Deflector 38
6.5 Terminating the Flue 38
6.6 Fixing the Flue 38
6.7 Installing the Coaxial Vent for the External Model 39
6.8 Preventing Exhaust Gas Backflow 39

7. Setting the DIP Switches 40

7.1 PCB DIP Switches 40
7.2 Front Panel DIP Switches 40

8. Connecting the Power Supply 41

9. Connecting Electrical Supplies 42

9.1 Accessing the PCB 42
9.2 About the PCB 43
9.3 Setting the Heating Demand 44
9.4 Connecting Applications - Low Voltage (DC) Application Part 45
9.5 Connecting Applications to the AC Application Part 47

10. Installation Check list 49

11. Operating the Boiler 51

11.1 Using the Front Panel 51
11.2 Turning the Boiler On or Off 53
11.3 Adjusting the Temperature 53
11.4 Accessing Basic Menu Items 55
11.5 Accessing Advanced Menu Items 61
11.6 Error Codes 67

12. Maintaining the Boiler 68

12.1 Cleaning the Boiler 68
12.2 Draining the Boiler 68
12.3 Protecting the Boiler from Freezing 69
12.4 Maintenance Schedules 70
12.5 Maintaining the Parts 71

13. Appendices 76

13.1 Wiring Diagram 76
13.2 Component Assembly Diagrams and Parts 77

1. Safety Information

The following safety symbols are used in this manual. Read and follow all safety instructions in this manual precisely to avoid unsafe operating conditions, fire, explosion, property damage or personal injury.

DANGER

Indicates an imminently hazardous situation which, if not avoided, could result in severe injury or death.

WARNING

Indicates a potentially hazardous situation which, if not avoided, could result in injury or death.

CAUTION

Indicates a potentially hazardous situation which, if not avoided, could result in property damage.

Note

Used for emphasis or for providing useful information not directly connected with the surrounding text but of importance to the user.

DANGER

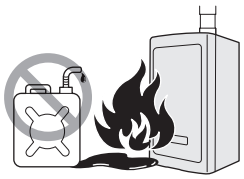

If oil fumes or leaks from the appliance:

- Extinguish any naked flames.
- Isolate the electrical supply.
- Isolate the fuel supply to the boiler.
- Rectify the fault.

Do not use or store flammable products, such as petrol, solvents, or adhesives in the same room or area as the boiler.

- The boiler has a main burner flame that can turn on at any time and can ignite flammable vapours. Vapours from flammable liquids can explode and catch fire, causing severe burns.
- Vapours cannot be seen and are heavier than air. They can travel long distances along the ground and can be carried from other rooms to the boiler's main burner flame by air current.
- Keep all flammable products far away from the boiler and store them in approved containers. Keep the containers closed tightly and out of the reach of children and pets.

⚠ WARNING

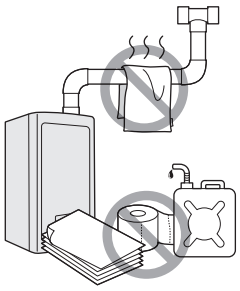

- **Do not store or use petrol or other flammable liquids near this boiler.**
  Doing so may result in fire or explosion.
- **Do not place combustibles, such as newspapers or laundry, near the boiler or flue system.**
  Doing so may result in a fire.
- **Do not place or use hair sprays, spray paints, or any other compressed gases near the boiler or flue system, including the flue termination.**
  Doing so may result in fire or explosion.
- **Do not operate the boiler with the front cover opened.**
  Doing so may result in fire or carbon monoxide (CO) poisoning, which may result in property damage or personal injury.
- **Do not operate this boiler without proper flue system.**
  Doing so may result in fire or carbon monoxide (CO) poisoning, which may result in property damage or personal injury.
- **Do not touch the power cord or internal components of the boiler with wet hands.**
  Doing so may result in electric shock.

⚠ WARNING

This appliance is intended for use by individuals with reduced physical, sensory or mental capabilities, or those lacking experience and knowledge, only under supervision and with appropriate instruction. Cleaning and maintenance should only be carried out by suitably qualified personnel.

CAUTION

- **Do not turn on the boiler unless the water and oil supplies are fully opened.**
  Doing so may damage the boiler.
- **Do not turn on the water if the cold water supply shut-off valve is closed.**
  Doing so may damage the boiler.
- **Do not use this boiler for anything other than its intended purpose, as described in this manual.**
- **Do not remove the front cover unless the power to the boiler is turned off or disconnected.**
  Failure to do so may result in electric shock.
- **When servicing the controls, label all wires prior to disconnecting them.**
  Failure to do so may result in wiring errors, which can lead to improper or dangerous operation. Verify proper operation after servicing.
- **Do not use unapproved replacement or accessory parts.**
  Doing so may result in improper or dangerous operation and will void the manufacturer's warranty.
- **Do not place anything in or around the flue terminals, such as a clothes line, that could obstruct the air flow in or out of the boiler.**

DANGER



To prevent burns:

- Use the lowest operating temperature setting necessary to provide comfortably hot water.
- If your household has children or elderly or disabled residents, consider using a lower temperature setting.
- Read all the instructions in this manual carefully before changing the temperature setting.
- Feel the water before using it on children, the elderly, or the disabled. Extinguish any naked flames.

DANGER

This boiler's water temperature is set to 49°C at the factory for your safety and comfort. Increasing the temperature increases the risk of accidental scalding. Water temperatures at or above 52°C can cause instant scalding or severe burns. Before you decide to change the temperature setting, read the following charts carefully.

Water Temperature	Time in which a young child can suffer a full thickness (3rd degree) burn
70°C	Less than 1 second
60°C	1 second
55°C	10 seconds
49°C	10 minutes
37°C	Very low scald risk

General Installation Guidelines

Navien ensures that this product contains no harmful substances and that no harmful materials have been used in its manufacture.

Current legislation must be taken into account on installing this appliance, and it must be installed in a place with suitable ventilation.

The boiler must be installed by an OFTEC registered installer.

The current building regulations must be observed on installing the boiler.

- The Technical Building Code.
- The Regulation for Heating Installations in Building.
- The Low Voltage Regulation.

Complying with the building regulations

This heating appliance forms part of the controlled services for the building. It is law that all controlled services for buildings must comply with building regulations. You must be able to satisfy your Local Authority Building Control Body (LABC) that the work carried out concerning the installation and commissioning of this heating appliance has been carried out to a satisfactory standard.

OFTEC operates a competent persons scheme and registered installers are able to certify that their work complies with building regulations.

Under the scheme:

- OFTEC must be informed about every installation.
- OFTEC will issue a building regulations compliance certificate to the householder and will notify the LABC.

OFTEC provide controlled document forms CD10 and CD11 for use during installation and commissioning respectively.

Other organisations operate self-certification schemes, e.g., NAPIT and BESCA Ltd., and it may be possible for installers who are members of these organisations to self-certify their work.

You must submit a building control notice to the LABC before installing any boiler. The LABC will then arrange regular inspection visits during the work to ensure that the installation complies with the regulations.

Installation

Failure to install appliances correctly could lead to prosecution.

The appliance should be installed by a competent person. The person installing the appliance should be aware of the Health and Safety at Work Act and take appropriate action to ensure that the regulations are adhered to. In order to give optimum efficiency and trouble free operation the appliance must be commissioned by a qualified OFTEC engineer.

Compliance with a British Standard does not, in itself, confer immunity from legal obligations. In particular, the installation of this appliance must be in accordance with the relevant requirements of the following British Standards and regulations in respect of the safe installation of equipment:

Standard	Description
BS 5410	part 1: Code of practice for Oil Fired Boilers.
BS 799	part 5: Specification for Oil Storage Tanks.
BS 7593	Code of Practice for treatment of water in domestic hot water central heating systems.
BS 5449	part 1: Specification for forced circulation hot water central heating for domestic premises.
BS 5955	part 8: Specification for the installation of thermoplastic pipes and associated fittings for use in domestic hot and cold water services and heating systems.
BS 7291	Thermoplastic pipes and associated fittings for hot and cold water for domestic purposes and heating installations in buildings.
BS 7074	part 1: Application, selection and installation of expansion vessels and ancillary equipment for sealed water systems.
BS 1254-2	Copper and copper alloys plumbing fittings part 2: Fittings with compression ends for use with copper tubes.
BS 7671	IEE Wiring Regulations, current edition.
BS 1362	Specification for general purpose fuse links for domestic and similar purposes.

The Building Regulations Part G, Part J and L1, England and Wales; Part F and Part J Section III, Scotland; Part L and Part F, Northern Ireland. Local water company by laws. The Control of Pollution (Oil) Regulations. OFTEC Standards.

Where no specific instruction is given, reference should be made to the relevant codes of practice.

EC Conformity Declaration

CE
1015

2. About the Boiler

2.1 Items Included

When you open the box, you will find the following items with the boiler. Check the box for each of the following items before installing the boiler. If it seems like there is a problem, do not use the boiler. Contact your supplier. Keep the included items out of the reach of children, as they can be dangerous. When you no longer wish to use the boiler, disable any parts that could be potentially hazardous.

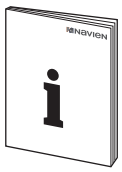	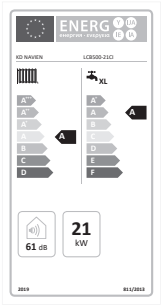	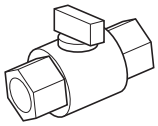	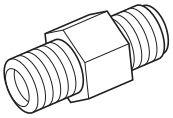
Installation & Operation Manual	ErP Label	Oil Line Cut Off Valve	Oil Line Nipple
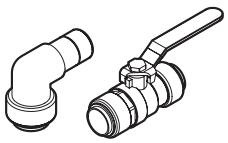	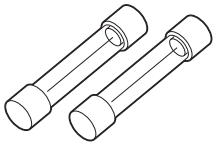	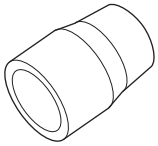	
Pre-plumbing Kit	Fuse	Reducer (34 kW)	Wind Deflector
			
Dust Cap for Automatic Air Vent	Wind Deflector	3-way Valve Wire (White) (System, Regular Model)	Circulation pump Wire (Blue) (Regular Model)

2.2 Accessories

The following optional accessories are available for the boiler.

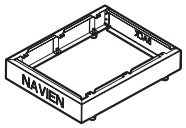	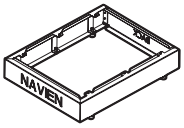	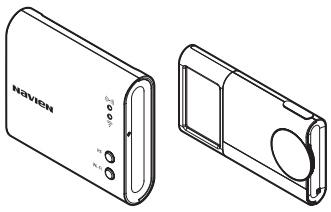	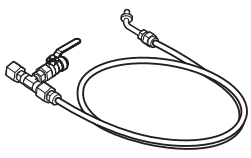
Plinth (Internal Model) (Height: Max. 140 mm)	Plinth (External Model) (Height: Max. 140 mm)	Smart Room Controller (Smart Plus)	Oil Pump Pressure Gauge Port

2.3 Service Tool

The following special tools are required for boiler service.

Component	Hex socket size	Part
Burner	13 mm	Nuts, 3 ea
Combustion Chamber	10 mm	Bolts, 4 ea

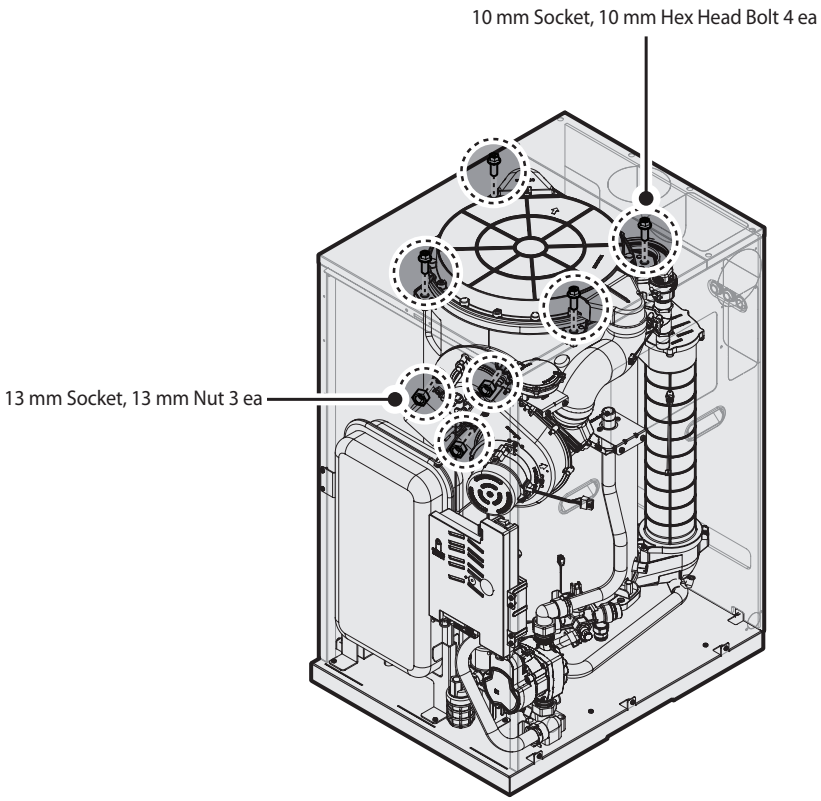

2.4 Specifications

The following tables list the general specifications and energy consumption for the boiler.

Description (Kerosene)			Unit	Internal model			External model		
				21RI 21SI 21CI	26RI 26SI 26CI	34RI 34SI 34CI	21RX 21SX 21CX	26RX 26SX 26CX	34RX 34SX 34CX
Heat input		Min/Max	kW	17/23	21/28	31/36	17/23	21/28	31/36
Heat output 80/60°C		Min/Max	kW	16/21	20/26	26/34	16/21	20/26	26/34
Heat output 50/30°C		Max	kW	22.5	27.9	36.4	22.5	27.9	36.4
Water capacity			ℓ	16.7	20.2	20.2	16.7	20.2	20.2
Central heating	Flow rate (Δt 20°C)		ℓ/min	15	18.6	24	15	18.6	24
	Waterside resistance (Δt 20°C)		mbar	130	200	220	130	200	220
	Max. operation pressure		bar	2.5					
	Supply temp. control range		°C	40 – 85 (Default 85)					
Domestic hot water (only Combi model)	Max. operation pressure		bar	10					
	Supply temp. control range		°C	30 – 60 (Default 50)			30 – 60 (Default 50)		
Connection	Heating	supply	㎜	Ø22					
		return	㎜	Ø22					
	DHW (Domestic Hot Water) outlet		㎜	Ø15					
	DCW (Domestic Cold Water) inlet		㎜	Ø15					
	Oil		inch	1/4 BSP Male					
	Flue system	Flue size	m	Coaxial Ø100/60 (plastic)					
		Max. horizontal length	m	20					
		Max. vertical length	m	21					
		90˚ elbow length	m	1.3					
		45˚ elbow length	m	1					
Electrical	Power supply		V/Hz	AC 230 V/50 Hz					
	Fuse		A	250 V (Ø5×20), 5 A/3.15 A					
	Consumption		W	85	96	118	85	96	118
	Circulation pump		W	60	60	60	60	60	60
Thermostats	Safety shut off		°C	95			95		
Sealed system	System pre-charged pressure		bar	1					
	Maximum operating pressure		bar	2.5					
	Expansion vessel (System/Combi Model)		Liters	12					
General data	Dimensions (D×W×H)	Regular/System models	mm	600×470×860			746×510×938		
		Combi models	mm	600×600×860			746×640×938		
	Weight (NET)	Combi models	kg	78	86	86	91	100	100
		System models	kg	68	76	76	79	87	87
		Regular models	kg	51	68	68	62	79	79

Product Datasheet On Energy Consumption

The following product data complies with the requirements of EU Regulations No. 811/2013 and No. 812/2013 as supplement to the Directive 2010/30/EU.

Product data	Symbol	Unit	LCB500		
			21RI, RX 21SI, SX 21CI, CX	26RI, RX 26SI, SX 26CI, CX	34RI, RX 34SI, SX 34CI, CX
Condensing boiler	-	-	Yes	Yes	Yes
Low-temperature** boiler	-	-	No	No	No
B1 boiler	-	-	No	No	No
Combination heater (CI models only)	-	-	Yes	Yes	Yes
Rated heat output	P_{rated}	kW	21	26	34
Seasonal space heating energy efficiency	η_S	%	92	92	92
Energy efficiency class	-	-	A	A	A
Useful heat output					
At rated heat output and high temperature regime*	P_4	kW	22	27	35
At 30 % of rated heat output and low temperature regime**	P_1	kW	7.2	8.1	11.2
Useful efficiency					
At rated heat output and high temperature regime*	η_4	%	91.02	90.92	90.92
At 30 % of rated heat output and low temperature regime**	η_1	%	96.87	96.77	96.77
Auxiliary electricity consumption					
At full load	elmax	kW	0.08	0.106	0.106
At part load	elmin	kW	0.027	103.87	103.87
In standby mode	P_{SB}	kW	0.003	0.003	0.003
Other items					
Standby heat loss	P_{stby}	kW	0.117	0.129	0.129
Ignition burner power consumption	P_{ign}	kW	0	0	0
Emissions of nitrogen oxides (only gas or oil fired)	NO_x	mg/kWh	101.8	79.9	79.9
Sound power level (External Model)	L_{WA}	dB	61.8	64.8	64.8
Additional data for combination heaters					
Declared load profile	-	-	XL	XL	XL
Daily electricity consumption	Q_{elec}	kWh	0.261	0.214	0.214
Annual electricity consumption	AEC	kWh	57	47	47
Daily fuel consumption	Q_{fuel}	kWh	24.202	24.728	24.728
Annual fuel consumption	AFC	GJ	18	24.202	24.202
Water heating energy efficiency	η_{wh}	%	81	80	80
Water heating energy efficiency class	-	-	A	A	A

* High-temperature regime means 60 °C return temperature at heater inlet and 80°C feed temperature at heater outlet.
** Low temperature means for condensing boilers 30°C, for low-temperature boilers 37°C and for other heaters 50°C return temperature (at heater inlet).

Specific Precautions

Read the user's information and installation manual before the application is assembled, installed or maintained.

2.5 Components

Internal Model (Regular / System)

The following diagram shows the key components of the boiler. Component assembly diagrams and particular parts lists are included in the Appendixes.

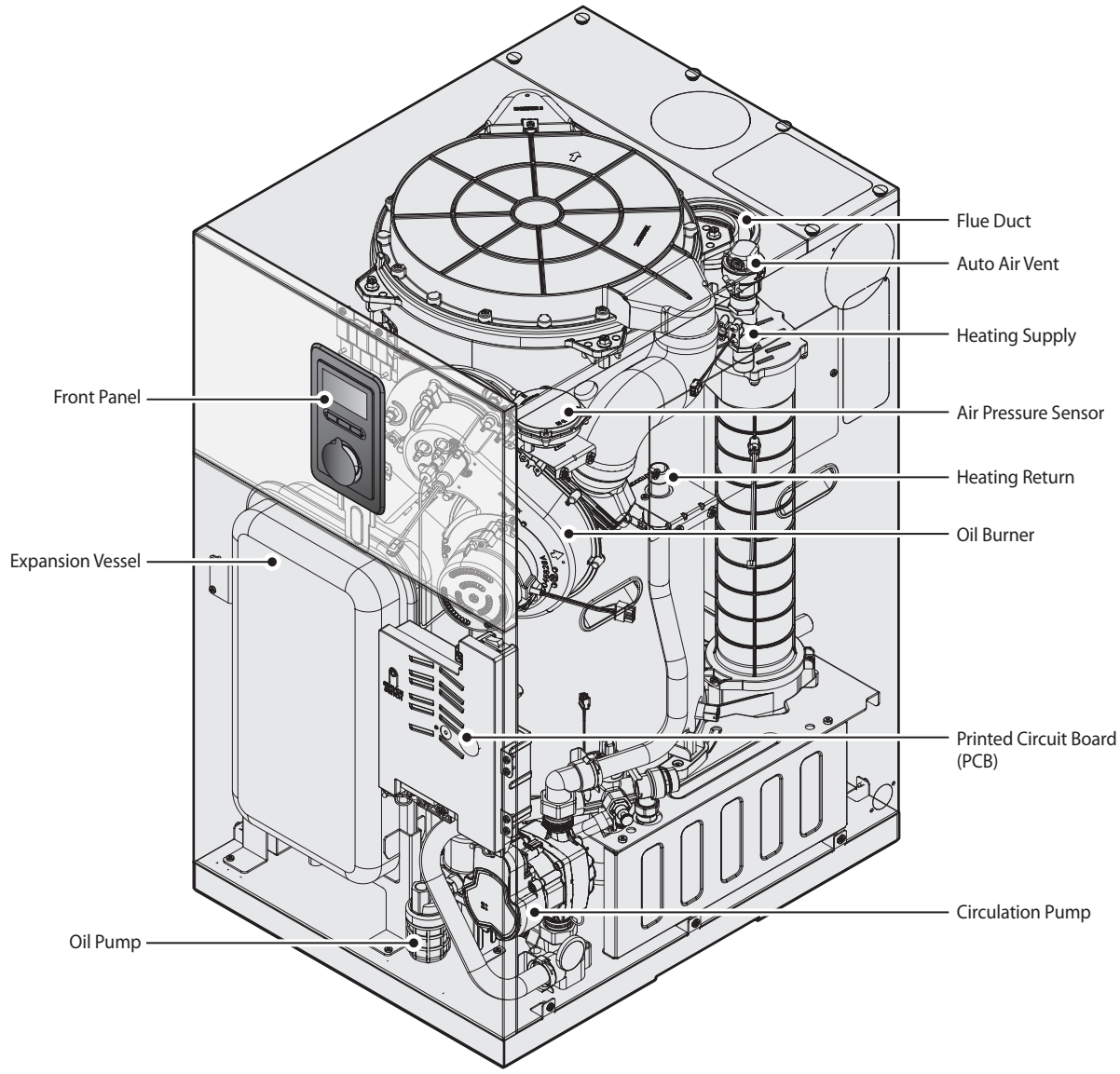

* The expansion vessel and circulation pump are not included in the regular model.

Internal Model (Combi)

The following diagram shows the key components of the boiler. Component assembly diagrams and particular parts lists are included in the Appendixes.

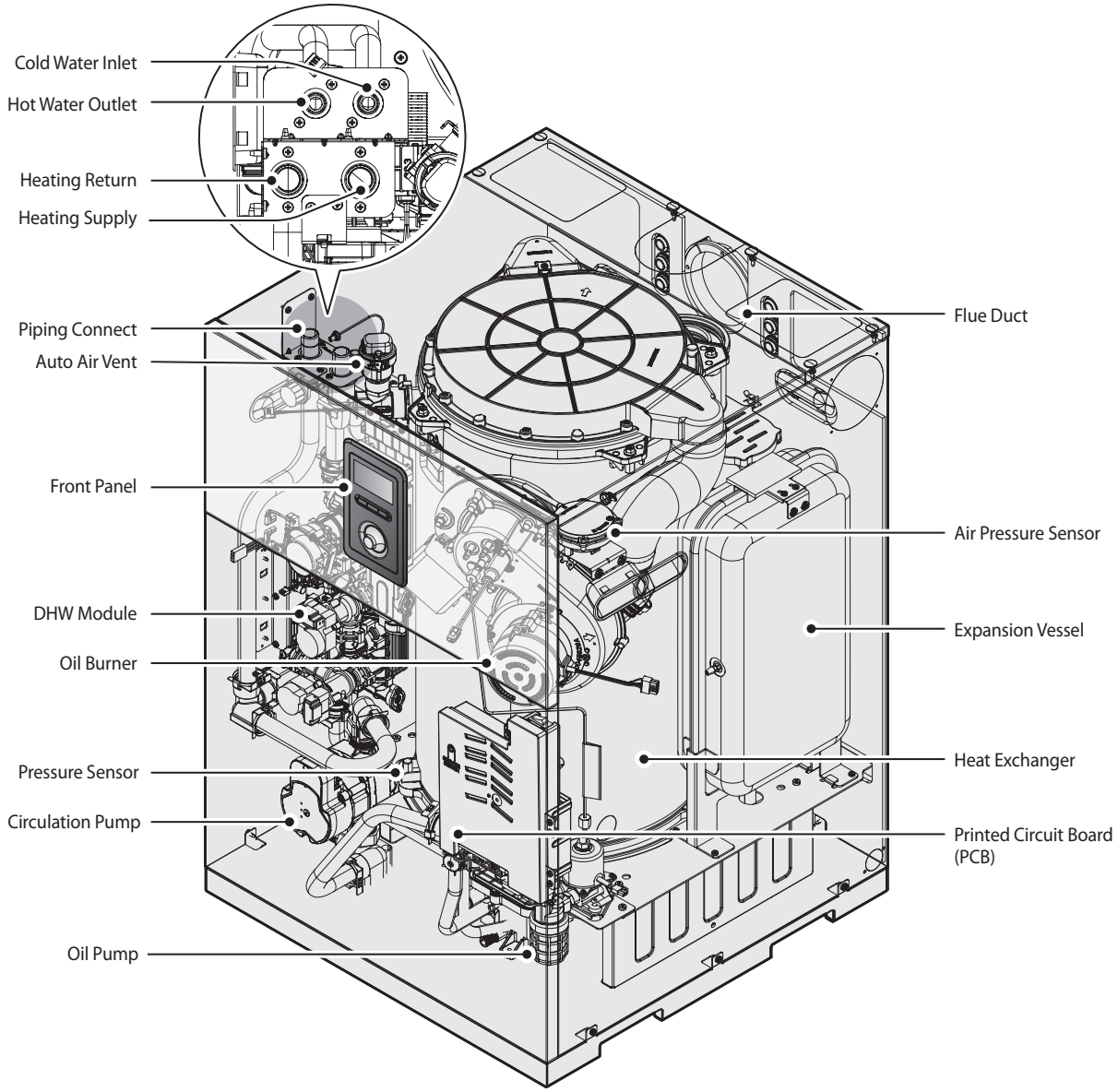

External Model (Regular / System)

The following diagram shows the key components of the boiler. Component assembly diagrams and particular parts lists are included in the Appendixes.

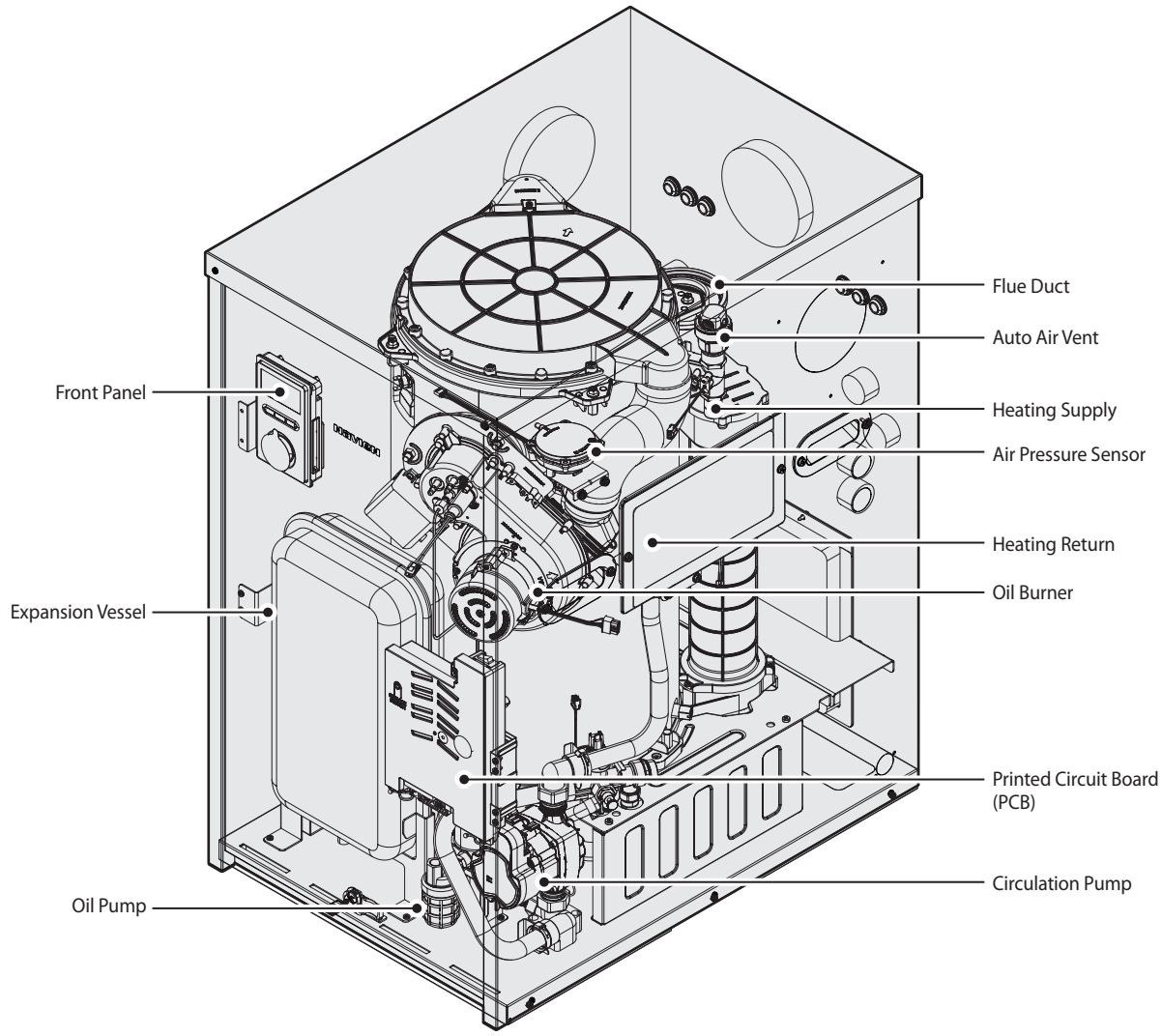

* The expansion vessel and circulation pump are not included in the regular model.

External Model (Combi)

The following diagram shows the key components of the boiler. Component assembly diagrams and particular parts lists are included in the Appendixes.

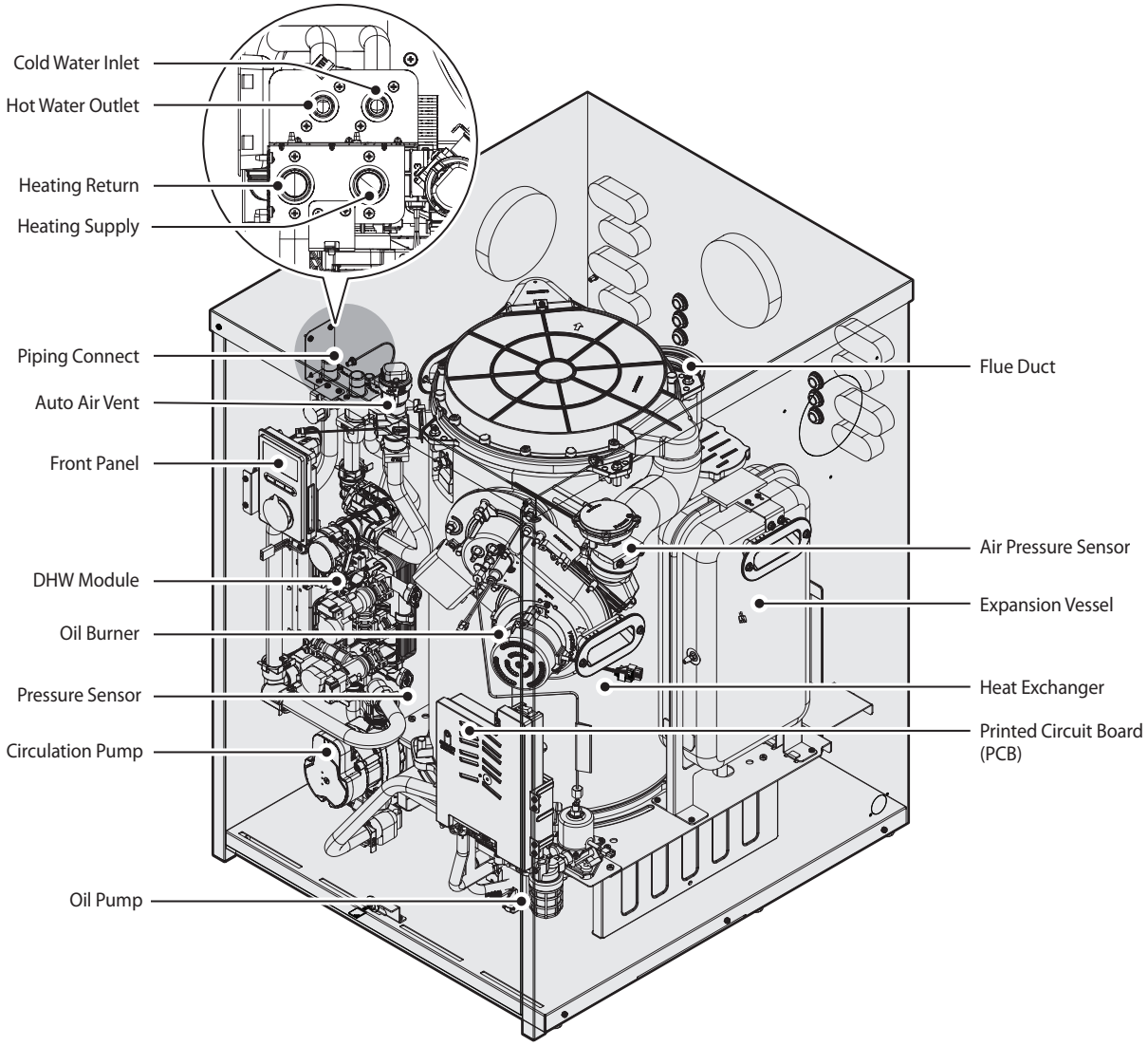

2.6 Dimensions

The following diagrams show the dimensions of the boiler and the table lists the supply connections.

Internal Model (Regular / System)

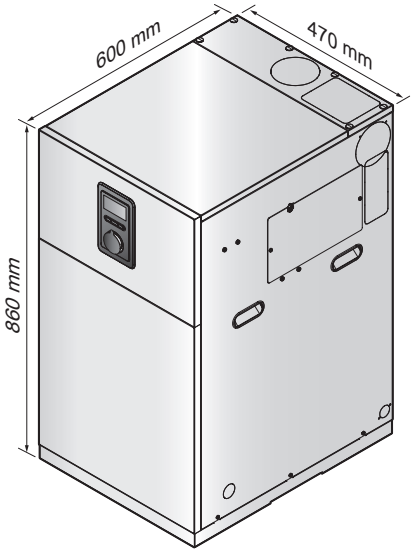

External Model (Regular / System)

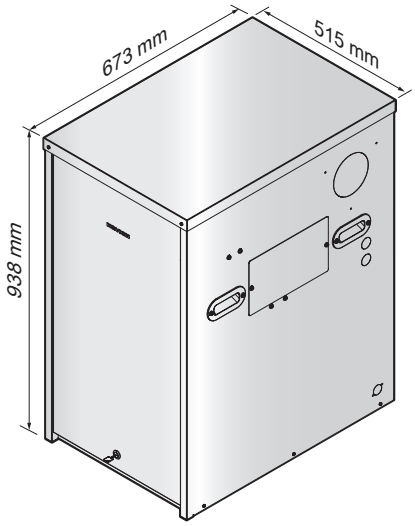

Supply Connections

Symbol	Description	LCB500		
		21SI, SX 21RI, RX	26SI, SX 26RI, RX	34SI, SX 34RI, RX
A	Flue Exhaust	Ø60/100		
B	Central Heating Supply	Ø22	Ø22	Ø22
C	Central Heating Return	Ø22	Ø22	Ø22
D	Oil Supply Inlet	¼" Ball Valve (Female)		

Top View

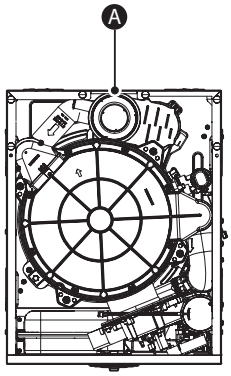

Right View

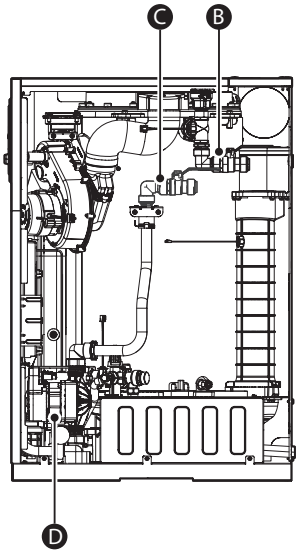

Internal Model (Regular / System)

Right View

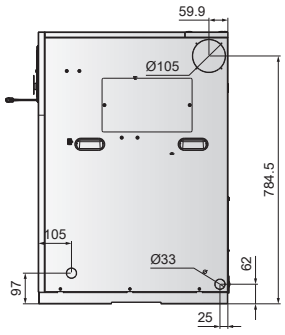

Back View

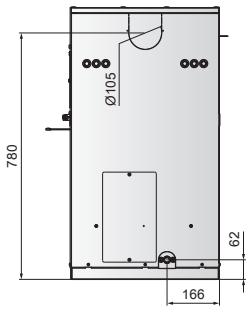

External Model (Regular / System)

Right View

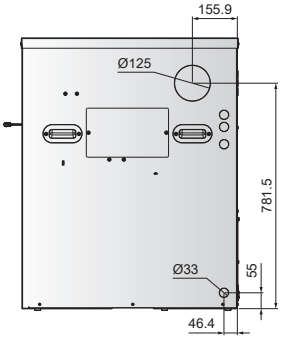

Back View

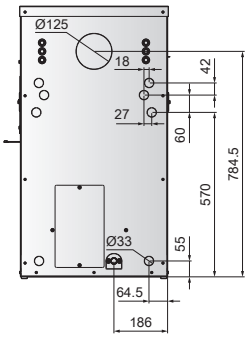

Internal Model (Combi)

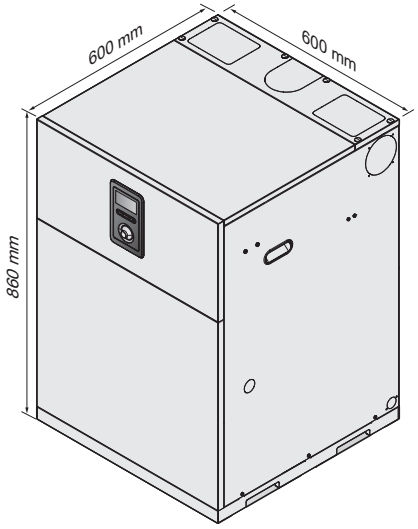

External Model (Combi)

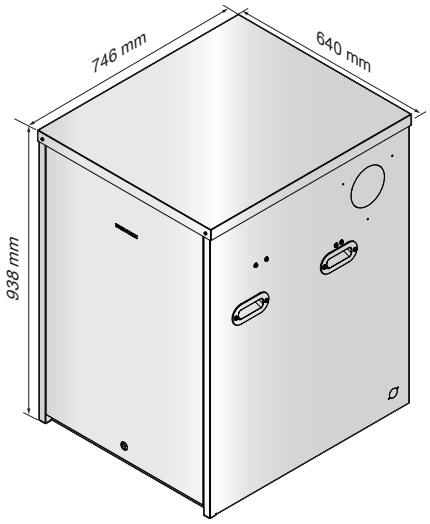

Supply Connections

Symbol	Description	LCB500		
		21CI, CX	26CI, CX	34CI, CX
A	Flue Exhaust	Ø60/100		
B	Central Heating Supply	Ø22	Ø22	Ø22
C	Central Heating Return	Ø22	Ø22	Ø22
D	DCW Inlet	Ø15 (Brass Connection)		
E	DHW Outlet			
F	Oil Supply Inlet	¼" Ball Valve (Female)		

Top View

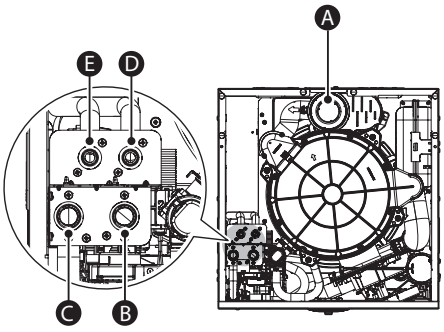

Internal Model (Combi)

Right View

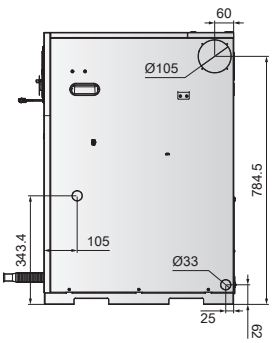

Back View

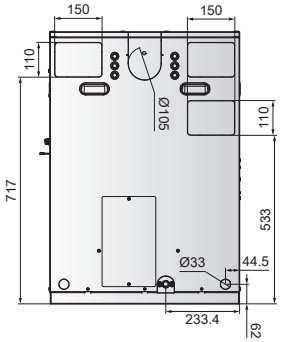

External Model (Combi)

Right View

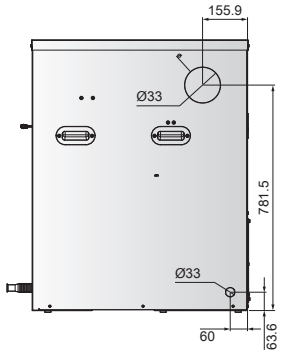

Back View

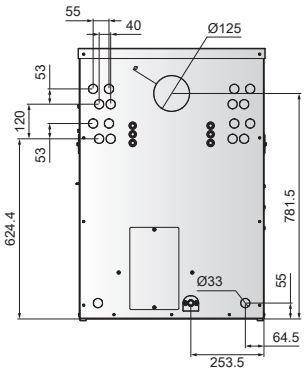

3. Installing the Boiler

3.1 Installation Procedure

The flow diagram below provides a step-by-step description of the recommended procedure for clear, easy installation of the LCB500 boiler in its final location. A detailed description is given of the procedure in the sequenced sections below:

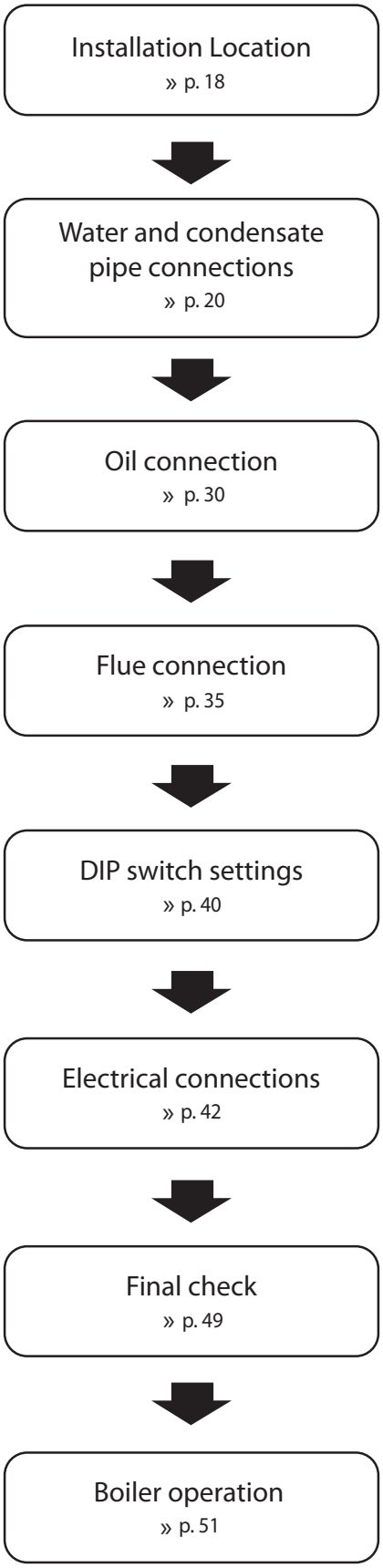

3.2 Choosing an Installation Location

When choosing an installation location, you must ensure that the location provides adequate clearance for the boiler, adequate venting and drainage options, and sufficient access to fuel, water, and electrical supplies.

Carefully consider the following factors when choosing an installation location.

Compliance Requirements

This boiler must be installed by qualified personnel in compliance with the applicable Laws and Regulations. In general, these Laws and Regulations are the Heating, Air Conditioning and Domestic Water Installation Regulation and all other local regulations.

Access to Utilities

The installation should be within a visible and accessible distance of utilities such as water, fuel and electricity.

Humidity and Contact with Water

When installing the boiler, avoid places with excessive humidity. The boiler has electric ignition components. Water spray or droppings can get inside the boiler and damage the ignition system. The boiler must be installed in a way to ensure that the ignition system components are protected from water (dripping, spraying, rain, etc.) during operation and service.

Proximity to Fixtures and Appliances

Install the boiler near fixtures that deliver or use hot water, such as bathroom, kitchen, and laundry room taps. Select a location that minimises the water piping required between major fixtures. If the distances are long or if the user requires "instant" hot water, installation of a recirculation line which circulates domestic hot water back to the boiler from the furthest fixture is recommended. Insulate as much of the hot water supply and recirculation lines as possible. For more information about the water supply, refer to "4.2 Installing a System Application" on page 23.

Adequate Drainage

The boiler produces a significant amount of condensate during operation. The boiler should be located near a suitable drain and where damage from a possible leak will be minimal. Installing the boiler in a location without a drain will void the warranty and Navien will not be responsible for water damages that occur as a result. For more information about condensate drainage, refer to "4.3 Connecting the Condensate Drain Line" on page 26.

The boiler must be located in an area where leakage of the unit or connections will not result in damage to the area adjacent to the appliance or to lower floors of the structure. When such locations cannot be found, installation of an adequately drained drain pan under the boiler is highly recommended. When installing the drain pan, ensure that the installation does not restrict combustion air flow.

Adequate Flue and Ventilation

The boiler must be located so that the grilles of the ventilation are not obstructed and normal boiler maintenance is possible even if installed between fixtures and fittings.

Select a location that requires minimal flue. Consider flue restrictions caused by windows, doors, air intakes, foliage, and other buildings. For more information about flue system, refer to "6. Flue System" on page 35.

To ensure adequate flue and ventilation, follow these guidelines:

- Maintain proper clearances from any openings in the building.
- Install the boiler with a minimum clearance of 300 mm above an exterior grade or as required by local codes.
- Do not enclose the flue termination.
- Install the exhaust flue in an area that is free from any obstructions, where the exhaust will not accumulate.
- Do not install the boiler where moisture from the exhaust may discolor or damage walls.
- Do not install the boiler in bathrooms, bedrooms, or any other occupied rooms that are normally kept closed or not adequately ventilated.

The requirements and recommendations stipulated in the Regulation for Heating Installations in Buildings (RITE) and any other applicable legislation in this field must be observed.

Adequate Installation Clearances

> **CAUTION**
>
> Do not install the boiler on carpeted floors.

Install the boiler in an area that allows for service and maintenance access to utility connections, piping, filters, and traps. Based on the installation location, ensure that the following clearances are maintained:

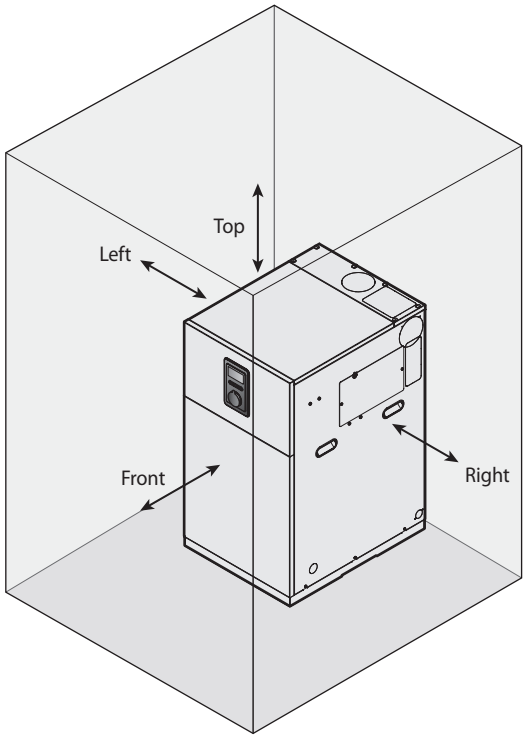

Position	Maintenance and Repair Clearances
Top	300 mm
Left	10 mm
Right	10 mm
Front	600 mm

Note

- A removable section of worktop above the boiler is required to provide access for heat exchanger servicing.
- Maintain proper installation clearances based on the installation site condition.

Clean, Debris and Chemical-free Combustion Air

- Do not install the boiler in areas where dust and debris may accumulate or where hair sprays, spray detergents, chlorine, or similar chemicals are used.
- Do not install the boiler in areas where petrol or other flammables are used or stored.
- Ensure that combustible materials are stored away from the boiler and that hanging laundry or similar items do not obstruct access to the boiler or its flue system.

4. Installing the System Piping

The installation must be made by sufficiently qualified technicians, authorised to do so. For correct installation, all the requirements and recommendations described in the Regulation for Heating Installations in Buildings (RITE) must be complied with, together with all other national and/or local regulations applicable at the time of installation. However, the following recommendations must be complied with:

- Prior to connecting plumbing to the boiler, flush the entire system to ensure it is free of sediment, flux, solder, scale, debris or other impurities that may be harmful to the system and boiler. During the assembly of the heating system, it is important to keep the inside of the piping free of any debris including construction dust, copper burr, sand and dirt.
- For retrofits, all system piping including radiators, must be cleaned of all build-up including sludge and scale. All systems, old and new, must be cleaned to remove flux, grease and carbon residue. Navien recommends cleaning the boiler system with cleaning products specially formulated for boiler systems. For retrofit applications with heavy lime scale and sludge deposits, a heavier duty cleaner may be required. For information on performing the cleaning, follow the instructions included with the boiler system cleaner products.
- If the boiler is installed in an existing system, any unsuitable additives must be removed by thoroughly cleaning the system. Cleaning of all the systems must be done in compliance with the requirements in standard BS 7593. In areas with hard water, treatment may be necessary in order to prevent scale from forming in the boiler. Make sure to use the water treatment product in the right concentration, according to the producer's instructions.
- It is recommended to fit shut-off valves to the heating installation output and return pipes, to avoid having to drain the installation when maintenance work is carried out on the boiler.
- Bleed the air from the boiler and heating installation. Ensure there is no air in the heating circuit.
- The LCB500 boiler is a condensing boiler, and it is therefore essential for the condensate outlet to lead to a drain, in compliance with all applicable national and/or local regulations to this respect.
- The boiler drain must not be located above a window, entry door or other public point of access. Bear in mind that boiling water or steam could come out when draining.
- Draining must be done in a downward direction.

WARNING

- Failure to rid the heating system of the contaminants listed above will void the warranty and may result in premature heat exchanger failure and property damage.
- Tighten the boiler water connections, taking care not to damage them. Do not force the tube connections excessively, as this could damage the connections and cause leaks.
- Any dirt in the tubes could reduce boiler efficiency and cause it to malfunction.
- Any pipes exposed to the elements or which could freeze in winter must be insulated with suitable insulating material.

CAUTION

Failure to follow the instructions provided in this section will void the warranty and may result in property damage, fire or serious injury.

4.1 Installing a Central Heating System

The fire-tube type heat exchanger of the Navien LCB500 boiler is designed to attain the highest level of heat transfer in a compact design. To accomplish this, the heated gas flows through a series of small-diameter tubes, maximizing the heat transfer area. To maintain the efficient and reliable operation of the heat exchanger, and to avoid heat exchanger failure, it is critical to ensure the rules and guidelines in this section are followed.

CAUTION

- The installation must be made by sufficiently qualified technicians, authorised to do so.
- For correct installation, all the requirements and recommendations described in the Regulation for Heating Installations in Buildings (RITE) must be complied with, together with all other national and/or local regulations applicable at the time of installation.

Refer to the following illustration for a typical heating piping example for the boiler.

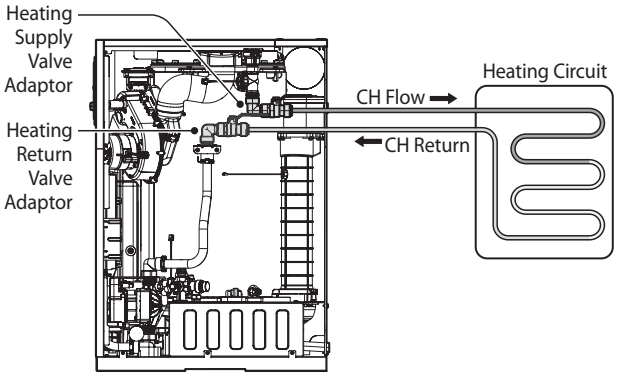

<Regular, System Models - Right View>

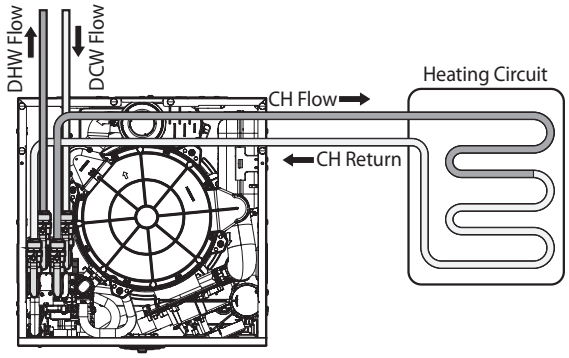

<Combi Models - Top View>

When connecting the central heating system, follow these guidelines:

- Tighten the connection valves with care to avoid damage.
- Test the boiler for proper central heating flow and inspect for leaks.

4.1.1 Guidelines for a Central Heating Installation

Read and follow the guidelines listed below to ensure safe and proper installation of a boiler heating system.

Freeze Protection for a Central Heating System

- Freeze protection products may be used for the central heating system. Freeze protection for new or existing systems requires specially formulated glycol, which contains inhibitors to prevent the glycol from attacking the metallic system components.
- Before using freeze protection products, ensure that system fluid contains proper glycol concentration and the inhibitor level is appropriate. Navien recommends against exceeding a 35% concentration of glycol.
- When using the freeze protection products, the system must be tested at least once a year, and as recommended by the manufacturer of the glycol solution.
- When using the freeze protection products, allowance should be made for expansion of the glycol solution.
- Freeze damage is not covered by the warranty.

WARNING

For systems requiring freeze protection, use only inhibited propylene glycol, specially formulated for hydronic heating systems; use of other types of antifreeze may be harmful to the system and will void the warranty.

System Pressure

- The Navien LCB500 boiler is intended solely for use in pressurised closed loop heating systems operating with 1-2.5 bar water pressure at the boiler outlet. To obtain the minimum system design pressure, follow the piping diagrams illustrated in this section.
- The LCB500 boilers cannot be installed on an open system. The system can be hydraulically separately using a plate heat exchanger or similar.

Air Elimination

This boiler may only be installed in a pressurised closed-loop heating system, free of air and other impurities. To avoid the presence of air, ensure all of the air is removed from the system during commissioning via strategically placed and adequately sized air removal devices located throughout the heating system.

Note See the examples of system application at the end of this section detailing the installation location of the air removal device in case an additional air removal device is required for a specific application.

WARNING

- Immediately repair any leaks in the system plumbing to avoid adding make-up water. Make-up water adds oxygen and minerals to the system that may lead to heat exchanger failure.
- Failure to follow these instructions may result in poor performance, unnecessary wear of system components and premature failure.

CAUTION

Do not solder piping directly onto the water connections, as the heat may cause damage to internal components. Use threaded water connections only.

4.1.2 Essential Elements in a Central Heating System

Auto Air Vent

The LCB500 boiler is equipped with an automatic air vent so that the air from the boiler is automatically discharged. A separate automatic air vent must be installed at the top of the piping system to exhaust air from the entire piping system.

Expansion Vessel

An expansion vessel must be installed in the central heating piping to prevent excessive pressure from building up in the system.

The expansion vessel must be sized in accordance with the water volume of the system as well as the firing rate of the appliance.

Note Ensure that the expansion vessel used is of sufficient size for the system volume. Refer to BS 7074:1:1989 or The Domestic Heating Design Guide for sizing the required vessel.

[References]

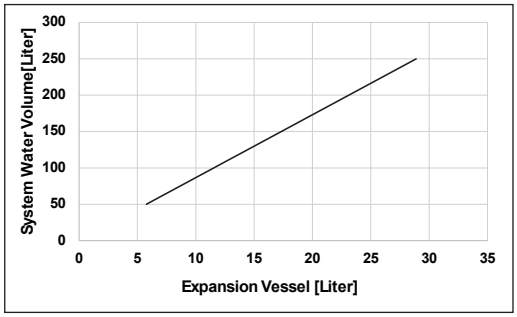

System Pressure: 0.5 – 2.5 bar
Max. temperature: 85°C

It is important to locate the expansion vessel and make-up water connection, on the inlet side of any pump in the system, as doing so will guarantee the lowest pressure in the system will be at least equal to the vessel and make-up water pressure.

CAUTION

Ensure the expansion vessel cannot become isolated from the boiler anytime the system is operating. Failure to follow these instructions may lead to discharge from the pressure relief valve, which may result in property damage or injury.

Pressure Relief Valve

The requirements recommended for the pressure relief valve are as follows:

- The pressure relief valve is calibrated to be activated at a maximum pressure of 3 bar, and all the pipes and connections must therefore be able to withstand pressures of up to 3 bar.
- It must tilt in a downstream direction throughout its entire length, and the water must run off to a suitable drain. It must be positioned so as not to cause damage to cabling, electrical equipment or persons.
- The pressure relief discharge pipe must not be located above a window, entry door or any other public access point. Bear in mind that boiling water or steam could come out when operating.
- The termination should be returned to the wall.

4.1.3 Central Heating System Piping

When connecting the central heating system, follow these guidelines:

- Carefully tighten all connections to avoid damage to fittings.
- After installing the boiler, check the central heating system's operation and inspect for leaks.

Items		Unit	LCB500		
			21RI, RX 21SI, SX 21CI, CX	26RI, RX 26SI, SX 26CI, CX	34RI, RX 34SI, SX 34CI, CX
△t 10°C	Flow Rate	lpm	30.1	40.1	51.6
	Head	m	4.3	7.0	11.1
△t 15°C	Flow Rate	lpm	20.1	26.8	34.4
	Head	m	2.1	3.5	5.2
△t 20°C	Flow Rate	lpm	15.1	20.1	25.8
	Head	m	1.2	2.0	3.0
△t 25°C (Minimum)	Flow Rate	lpm	12	16	20
	Head	m	0.9	1.2	1.7

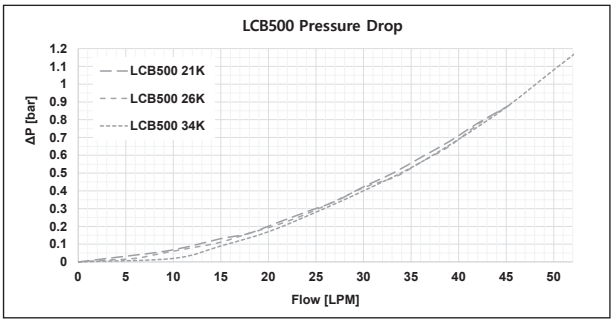

Note Refer to the performance curve to select a pump that suits your application. The boiler can supply up to a maximum of 100 W current at the boiler pump connection terminal.

4.1.4 Water Quality Standards for Appliance Quality Assurance

The water supplied to the boiler must satisfy the water quality requirements on the following table.

Water Chemistry	Standards for Appliance Quality Assurance
Hardness	Below 200 ppm
Chloride Concentration	Below 150 ppm (Below 4 ppm of residual chlorine)
TDS (Total Dissolved Solids)	Below 500 ppm
pH	6.5–8.5

- **The water hardness must be below 200 ppm.**
  Using water with a hardness above 200 ppm for the boiler may create lime scale inside the boiler and cause a product malfunction. Use a water softener to satisfy the standards for appliance quality assurance (below 80 ppm is recommended).

  Note Using indirect heat exchange through a plate-type heat exchanger is an exception.

- **The chloride concentration of water must be below 150 ppm (below 4 ppm of residual chlorine).**
  Using the water with a chloride concentration above 150 ppm or 4 ppm for residual chlorine for the boiler may cause a product malfunction due to corrosion.
- **The pH must be between 6.5 and 8.5.**
  - Using water with a pH below 6.5 may cause a product malfunction due to corrosion.
  - Using water with a pH above 8.5 may cause a product malfunction due to lime scale created inside the boiler.

  Note The following situations adversely impact the quality of the appliance

- **The water supplied to the boiler does not satisfy the water quality requirements in the table above.**
  - Using chemically unbalanced water for the boiler may cause a product malfunction or reduce the product lifetime.
- **Water below the minimum circulation flow rate is supplied to the boiler (to see detailed flow rate information, refer to the "4.1.3 Central Heating System Piping" on page 22.**
  - Using water that is below the minimum circulation flow rate for the boiler may cause a product malfunction due to the creation of lime scale inside the boiler or a reduction in product efficiency. If the flow rate is lower than the minimum rate, use an external pump (below 100 W) to maintain a flow rate above the minimum. Also, ensure the pipes used for the boilers are not blocked and check if there are any pressure drops.

CAUTION

If the water supplied to the boiler does not satisfy the water quality requirements, contact an authorised technician or licensed professional to avoid product malfunctions due to poor water quality before supplying water to the boiler.

4.2 Installing a System Application

Refer to the following examples to properly implement a system for central heating, DHW supply, or both. These examples are provided to suggest basic guidelines When installing the boiler system. However, the actual installation may vary depending on the circumstances, local building codes or regulations.

The heating capacity of the unit must be previously established by calculating the building's heat requirement according to the current regulations. To ensure proper operation and long boiler life, the plumbing system must be adequately sized and complete with all the necessary accessories, including a room thermostat, a thermostatable valve (TRV), etc. The system delivery and return pipes must have a diameter of at least 22 mm for the first 3 m of length from the unit **and must be constructed in copper. No other material is permitted within 1 m of the appliance**.

If the system delivery and return pipes follow a path where air pockets can form in certain places, it is advisable to install vent valves at these points. Also, drain cocks must be installed at the lowest points in the system to allow complete emptying.

An automatic bypass with a flow rate of at least 6 l/min must be installed (as far away as possible from the boiler) if radiators with thermostatic valves have been connected to combination boilers and in front of any motorised valves for system/regular boilers.

CAUTION

- The installation must be made by sufficiently qualified technicians, authorised to do so.
- For correct installation, all the requirements and recommendations described in the Regulation for Heating Installations in Buildings (RITE) must be complied with, together with all other national and/or local regulations applicable at the time of installation.

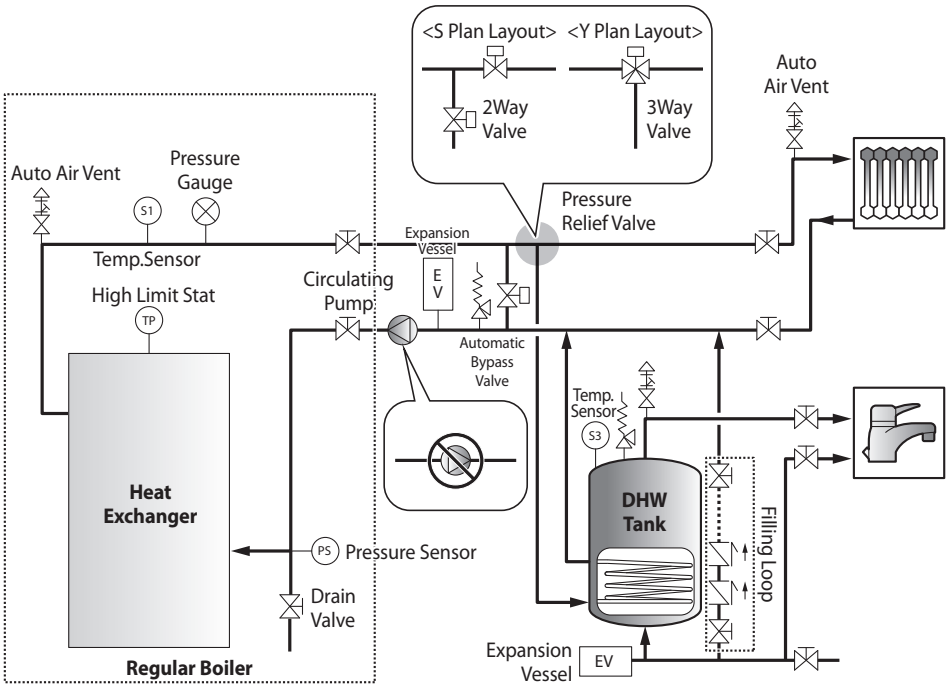

<Regular Boiler Heating & DHW Cycle>

CAUTION

When installing an optional circulating pump, ensure that it is installed in the proper direction. Also, install the circulator pump to the return pipe and allow it to circulate hot water towards the boiler. If a circulator pump is installed in the wrong direction, the boiler's heat exchanger cannot be vented properly, which may damage the boiler and cause it to malfunction.

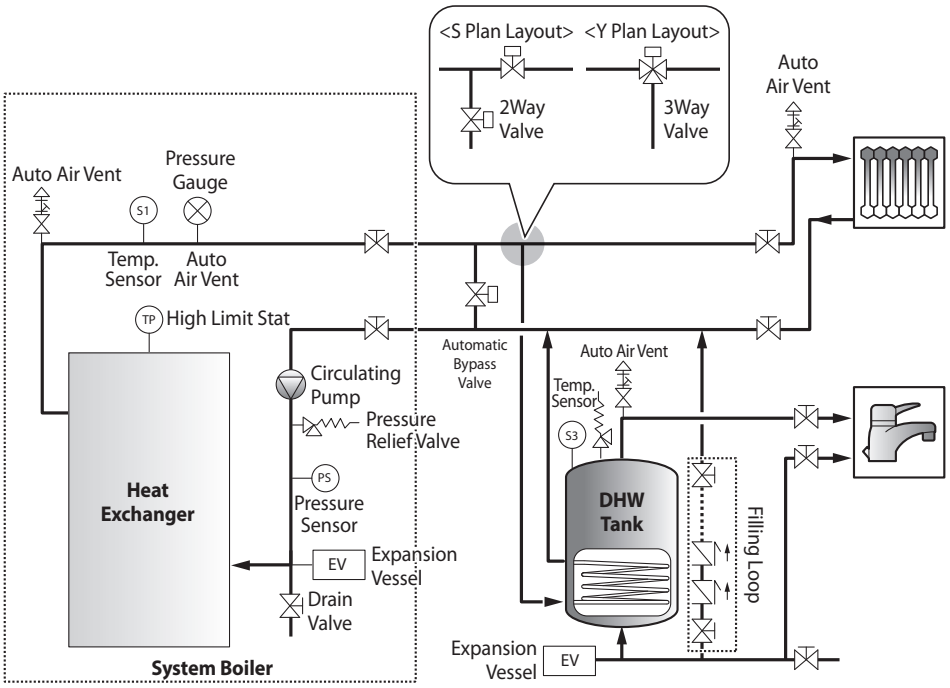

<System Boiler Heating & DHW Cycle>

Note Refer to "7. Setting the DIP Switches" to control the boiler using the external CH Controller and DHW Tank.

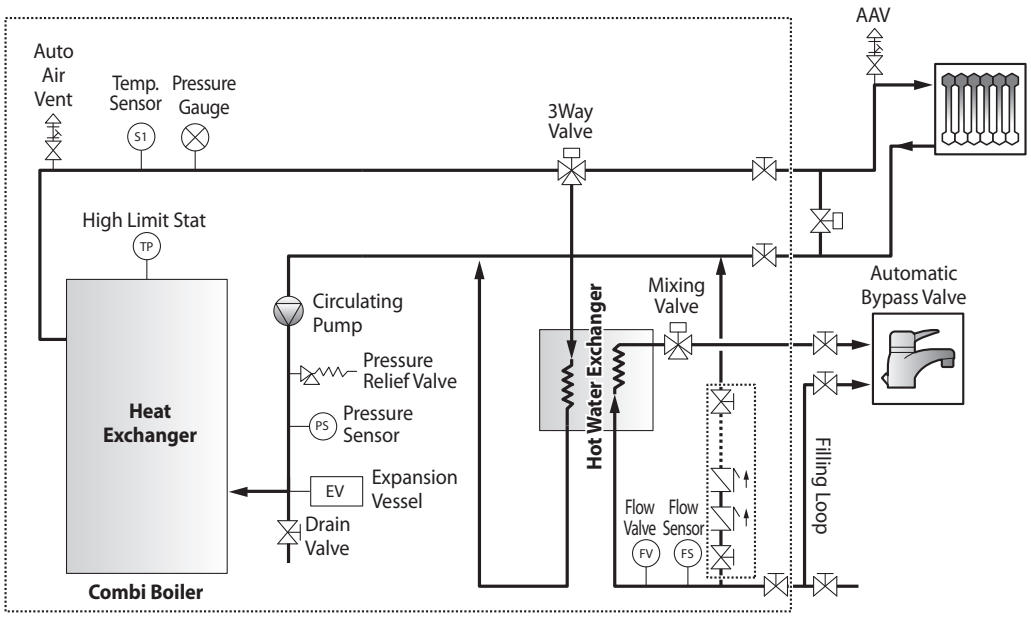

<Combi boiler Heating & DHW Cycle>

When installing the system, follow these guidelines:

Use only pipes, fittings, valves, and other components (such as solder), that are approved for use in potable water systems.

Tighten the connection valves with care to avoid damage.

The external hydraulic bypass valve is required.

An additional expansion vessel must be installed to the system in the central heating return.

4.3 Connecting the Condensate Drain Line

The Navien LCB500 boiler produces condensate during operation. This condensate is acidic, with a pH level between 2 and 5, and must be disposed of in accordance with local regulations. We recommend purchasing and using a separate condensate neutralizer kit for disposal. However, other appropriate drainage methods may be used, provided they comply with local codes.

CAUTION

For correct installation and trouble free operation of the appliance the following advice should be followed:

- All condensate pipework must 'fall' from the appliance by a minimum of 3 degrees (52 mm per metre) to ensure adequate condensate flow.
- The pipework route must allow air to be supplied back to the appliance for correct operation of the condensate trap.
- Connection to a rainwater down pipe must include an air break.

Also:

- Keep external pipework as short as possible and not exceed 3 metres length. If the external pipes exceed 3 metres in length, use a support (optional) to adjust the height of the boilers installed on the floor.
- External pipework should be increased to a minimum diameter of 32 mm and ideally be insulated.
- Minimise the number of bends and connectors.
- Remove burrs after cutting pipe.
- Remove surplus solvent from the interior of the pipe.

The requirements recommended for the condensate drain line installation are as follows:

- For correct condensate drain line installation, the tube must have a minimum diameter of Ø21.5 mm.
- The pipe must be made of a material that can withstand corrosion, e.g. PVC, PVC-U, ABS, PVC-C or PP. It must not be made of metal.
- For safety reasons, the end of the tube must be as close as possible to the draining point.
- When the condensate drainage is connected to a general drain network inside the building, the effects of overpressure that could occur inside it must be taken into account, installing suitable pressure release and ventilation elements.
- The length of the tubes outside the building must be as short as possible. They must also be installed with as much tilt as possible. The tubes must be insulated if they are exposed to extremely cold weather or blizzards. If the tubes are not insulated, they must have a diameter of at least Ø32 mm.
- The drain tube must have a minimum tilt of 2.5° downstream of the boiler.
- For tubes with Ø21.5 mm, the maximum permitted length is 3 metres.
- If the appliance is installed in non-heated premises, the tube system must be treated as if it was an outdoor installation.
- To prevent the risk of tripping, the outdoor tubes must be fixed to the walls.

Before connecting the condensate drain, choose one of the following disposal options:

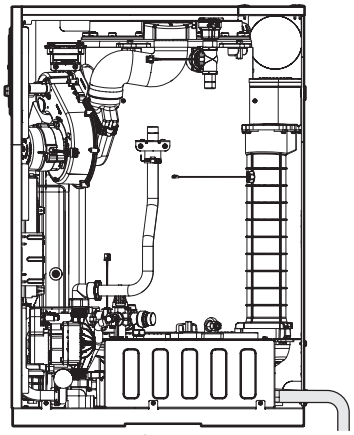

<Right View>

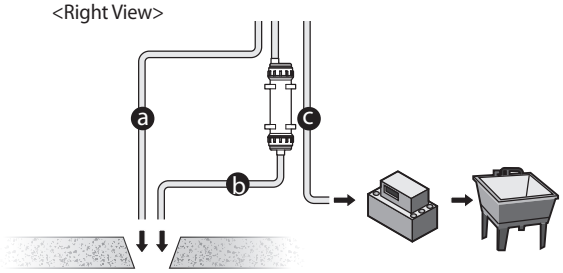

a. From the boiler directly into an external drain.

Note Do not install a fixed connection for the drain.

b. From the boiler, through a neutralizing agent, and then into an external drain.

Note If you choose this option, the neutralizing agent must be replaced periodically. Depletion of the neutralizing agent will vary, based on the usage rate of the boiler. During the first year of operation, the neutralizer should be checked every few months for depletion and replaced as needed.

c. From the boiler into a condensate pump, and then into a laundry tub.

Note A pump can be used when there is a long distance between the boiler and the laundry tub or when the bottom of the boiler is lower than the top of the laundry tub.

To connect the condensate drain:

1. Connect an integrated drain hose to the 21.5 mm at the bottom of the boiler.

   Use only corrosion-resistant material for the integrated drain hose, such as PVC or CPVC. Do not reduce the size of the integrated drain hose to less than 21.5 mm. The integrated drain hose can be connected to the condensate trap using a condensate trap hose. The hose connection must be secured with a drain hose clip.

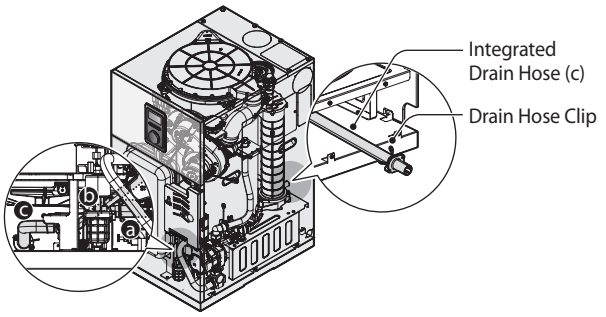

Symbol	Description
a	Pressure relief valve drain hose
b	System drain hose
c	Integrated drain hose

2. Place the free end of the integrated drain hose into an appropriate drain.
3. If you are using a condensate pump, ensure that the pump allows for up to 3 LPH of drainage for each boiler in the system.
4. If you are not using a condensate pump, ensure that the integrated drain hose is pitched downward at a minimum slope of 6 mm per 30 cm.

Note Water must be poured into the exhaust connection to fill the condensate trap.

4.4 Installing the Plinth (Optional)

Place the plinth on a flat floor, and then place the boiler on the plinth securely so that the boiler does not move during operation.

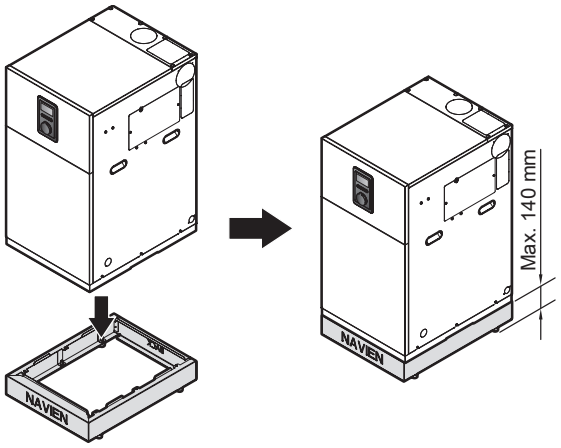

Note If the plinth is not level with the floor, adjust the height of the stoppers on the plinth to make it level with the floor.

4.5 Filling the System

The LCB500 boiler is equipped with an automatic air vent. This automatic air vent eliminates air in heating systems without the need for manual intervention. This prevents undesired noise, wear of devices in the circuits and inefficient performance of heating units.

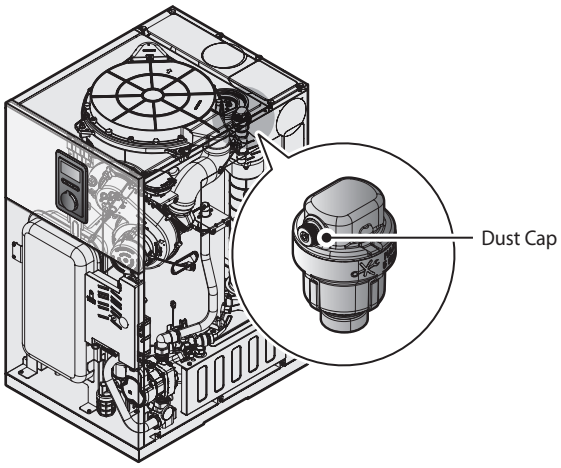

Note The dust cap is separated and shipped in the accessory. If the air vent is out of order or leaking due to a malfunction, close the air vents using the dust cap included in the accessory.

Refer to the following illustration for system fill.

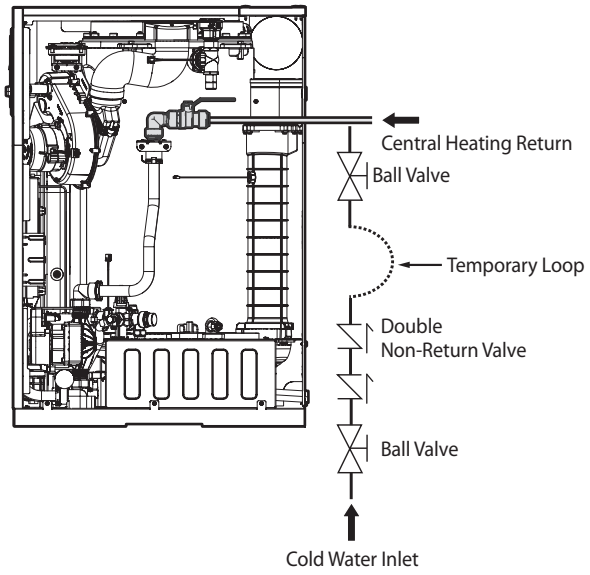

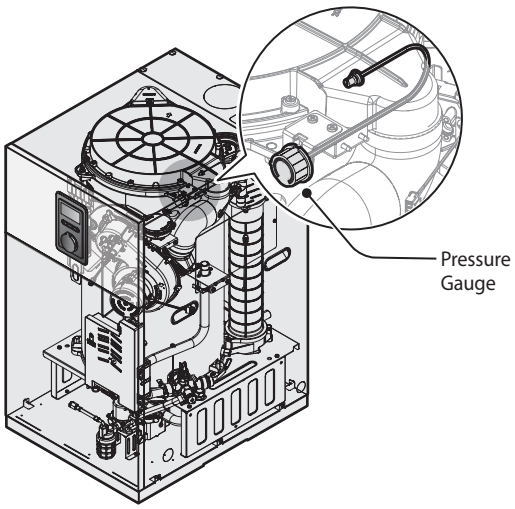

<Regular/System Model Pressure Gauge Position>

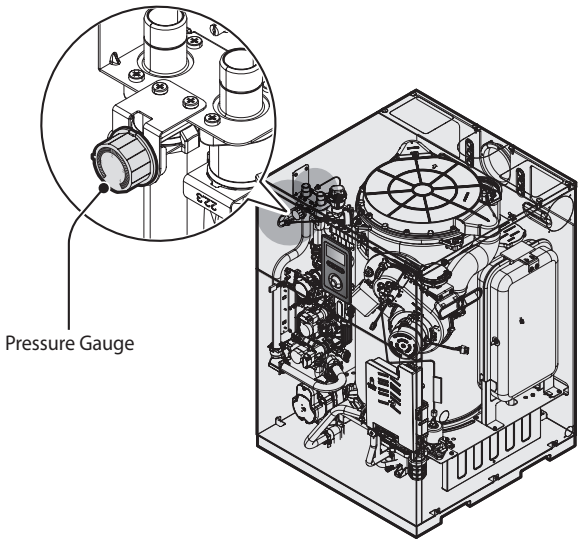

<Combi Model Pressure Gauge>

Note

- For combi models, the filling loop must be installed separately. Only products certified with WRAS or REG4 must be used.
- The system must be filled with approved equipment and comply with all regulations for system fill.
- The expansion vessel fitted is supplied with a charge pressure of 1.0 bar. Do not pressurise the vessel above 1.5 bar.
- To perform an air purge after initially filling the boiler pipes, the pump will run for 5 minutes and 20 seconds. The boiler will operate normally after performing an air purge.

4.6 Testing the Water System

WARNING

Ensure that the boiler is full of water before firing the burner. Operating the unit without filling it will damage the boiler. Such damage is not covered by the warranty, and may result in property damage or severe personal injury.

Perform a fill test after installing the boiler's water system to make sure that the system has been installed properly. Follow the instructions below to perform a fill test on the water system.

1. Close the manual air vent and the boiler drain valve.
2. Fill the boiler. The correct pressure will vary with each application.
3. If the pressure is lower than the minimum pressure set (0.4 bar by default), error code E302 will appear on the display.
4. Fill the boiler with more water until the error message disappears.
5. At initial fill and during boiler start-up and testing, check the system thoroughly for leaks. Repair any leaks before proceeding further.

WARNING

Eliminate all system leaks. The continual introduction of fresh makeup water will reduce boiler life. Minerals can build up in the heat exchanger, reducing heat transfer, overheating the heat exchanger and causing heat exchanger failure.

CAUTION

Before operating the boiler for the first time, ensure that the boiler system is filled with water. Purge the air inside the system to avoid damage to the boiler.

5. Connecting the Oil Supply

5.1 Essential Elements in the Oil Supply

This appliance is suitable for Kerosene (Class C2). No other fuel may be used.

Fuel Storage Tank

The tank should be positioned in accordance with the recommendations given in BS 5410:1:1997, which gives details for filling, maintenance and protection from fire.

A steel tank may be used and must be constructed to BS 799:5:1987 and OFS T200.

CAUTION

- A galvanised tank must not be used.
- A plastic tank may be used but must comply with OFS T100.

Note Plastic tanks should be adequately and uniformly supported on a smooth level surface, across their entire base area, that is, the area in contact with the ground.

Regulations & Standards

In England and Wales, installations in single family dwellings have to comply with building Regulations Part J. This requires compliance with BS 5410 Part 1:2014. All tanks either deemed to be at risk or with a capacity of more than 2500 litres are required to be bunded.

For installation in Scotland, Building Standard Part F applies. This requires compliance with BS 5410 Part 1:2014 and BS 5410 Part 2:2013. All tanks either deemed to be at risk or with a capacity of more than 2500 litres are required to be bunded.

Those externally installed tanks with a capacity of less than 2500 litres will require a bund if located not more than 50 metres from a spring or bore hole, 10 metres from controlled waters and, additionally, where it may constitute a hazard.

The above risks and hazards are described in OFTEC Technical book 3.

In Northern Ireland, the Building Regulations do not currently cover the installation of oil storage tanks.

In the Republic of Ireland the requirements of BS 5410 Part 1:2014 and BS 5410 Part 2:2013 are required to be in compliance with Building Regulations Part J.

Fuel Pipes

Fuel supply pipes should be of copper tubing with an external diameter of at least 10 mm.

Galvanised pipes may not be used.

All pipe connections should preferably use flared fittings. Soldered connections must not be used on oil pipes.

CAUTION

Flexible hoses must not be used outside the boiler.

Fire Valve

A fire valve is an essential part of the oil supply system. It should be capable of cutting off the flow of oil outside the building in the event of a fire starting within the boiler. The valve should be located just outside the building at the point where the oil supply line enters. It must be activated by a remote sensor located over the burner, but in a position clear of any direct radiation or excessive heat.

Note
- Fire valves should comply with OFTEC Standards OFS E101.
- Fitting of fire valves should comply with BS5410 Part 1:2014 and OFTEC Technical book 3.

Oil Strainer & Water Separator

Fit an oil strainer and water separator to the oil supply pipe, near the oil storage tank.

Fit an additional oil filter (74µm max filtration size) close to the boiler, but not inside the boiler.

Install a manual shut-off valve. It should be fitted before installing the filter, to allow the filter to be serviced. Install the valve as close to the oil storage tank as possible.

CAUTION

Contaminants can lead to system damage. The oil line must be flushed prior to commissioning.

5.2 Connecting the Flexible Hose to the Fuel Pipe

After installing the boiler, use the oil line nipple (included with the boiler) to connect the flexible hose to the fuel pipe of the oil storage tank.

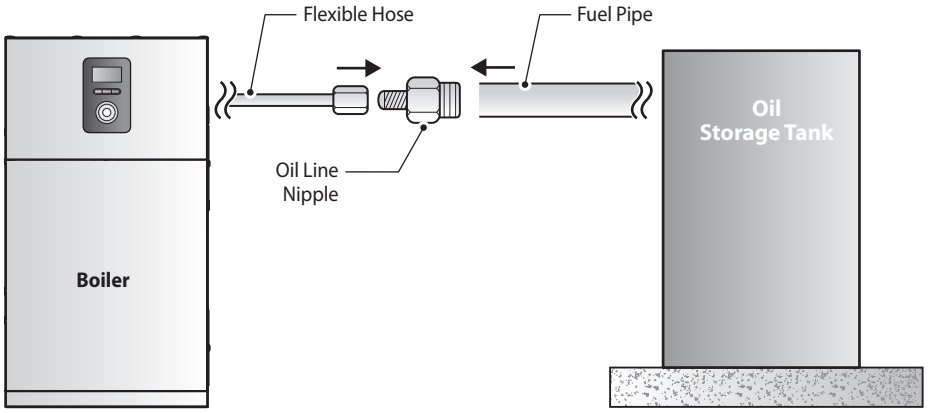

CAUTION

The oil line nipple must be correctly joined between the flexible hose and the fuel pipe to avoid a possible leak.

5.3 Oil Supply

Refer to the following illustration and table for the fuel transfer distance. Wrong oil pipe length may result in fuel supply problem.

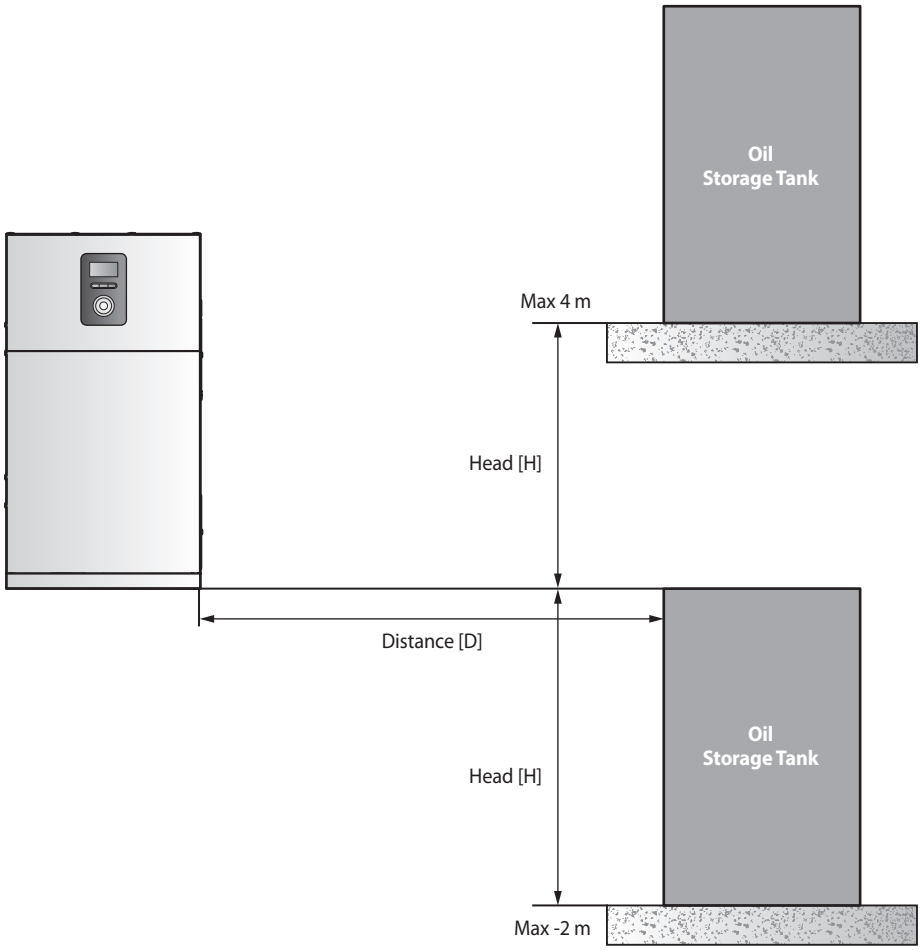

	H (Head)	Oil Pipe OD Ø10	Oil Pipe ID OD Ø12
		H + D (Distance)	H + D (Distance)
Maximum Pipe Run	5 m	50 m	50 m
	4 m	50 m	50 m
	3 m	50 m	50 m
	2 m	50 m	50 m
	1 m	50 m	50 m
	0 m	50 m	50 m
	-0.5 m	20 m (30 m)	25 m (35 m)
	-1.0 m	10 m (25 m)	15 m (30 m)
	-1.5 m	10 m (20 m)	10 m (30 m)
	-2.0 m	5 m (15 m)	5 m (20 m)

Fuel Line Priming Guidelines

The specified maximum fuel line length is based on conditions where the fuel line is initially empty. Under these conditions, the pump is capable of reaching normal operating status within 5 minutes.

For extended fuel line applications, it is recommended to fully purge air from the fuel line prior to operation. When the fuel line is properly primed, the usable length may exceed the stated limit.

5.4 Oil Pump

CAUTION

- The oil pump pressure cannot be adjusted. Only checking the pressure is allowed.
- Two air vent bolts have been installed. After purging air from the pump, verify that there is no oil leakage around the two air vent bolts before operation.
- Ensure that all air is purged from the pump, as insufficient purging may cause noise.

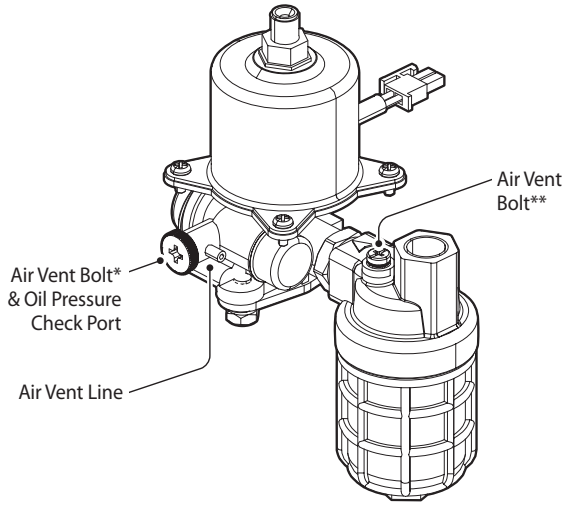

* For use during operation.
** For use during non-operation.

5.4.1 Purging Air whilst Product is not in Operation Mode

1. After installation, slightly loosen the bolt on the oil filter to vent air from the oil line. If the fuel level is above the oil filter, air will be automatically released through the bolt.
2. Once the oil filter has been completely filled with fuel, secure the bolt to make sure there is no leakage from the bolt.

5.4.2 Purging Air During Product Operation

1. When the boiler is running, slightly loosen the bolt on the fuel pump. This allows air to be vented through the air vent line. During this process, air will be vented through the air vent line.

CAUTION

Oil may also be discharged during this process. Make sure to take appropriate precautions, such as using protective gear and collecting any discharged oil for proper disposal.

Note Once the air in the oil pump has been completely purged, the operating noise of the electric pump will decrease.

2. When the noise subsides, tighten the oil pump bolt and check for any oil leakage around the bolt.

5.4.3 Purging Air from the Electric Pump (Applicable if the fuel level is above the electric pump)

1. Loosen the bolt at the top of the filter to vent any air trapped within the fuel line.
2. Once the oil filter attached to the electric pump has been completely filled with fuel, securely tighten the bolt.
3. Loosen the screw adjacent to the electric pump.

CAUTION

Do not fully remove the screw, as fuel may be discharged through the screw hole of the electric pump.

4. Turn on power to the boiler to start operation. During operation, air inside the electric pump will be vented through the designated line.

CAUTION

Oil may also be discharged during this process. Make sure to take appropriate precautions, such as using protective gear and collecting any oil for proper disposal.

5. Once all air has been purged from the electric pump, re-tighten the screw.

5.4.4 Purging Air from the Electric Pump (Applicable if the fuel level is below the electric pump)

1. After purging as much air as possible from the fuel line, connect the fuel line to the boiler.
2. Loosen the screw next to the electric pump.

> **CAUTION**
>
> Do not fully remove the screw, as fuel may be discharged through the screw hole of the electric pump.

3. Apply power to the unit to initiate operation. During operation, air inside the electric pump will be vented through the designated line.

> **CAUTION**
>
> Oil may also be discharged during this process. Make sure to take appropriate precautions, such as using protective gear and collecting any oil for proper disposal.

4. Once all air has been purged from the electric pump, re-tighten the screw.

5.4.5 Checking the Oil Pump Pressure

To check the oil pump pressure, remove the screw on the pump and use the pressure gauge port provided by Navien. Note that the pressure is not adjustable, so keep this in mind during inspection.

Measuring the Oil Pump Pressure

1. Stop running the boiler.
2. Remove the air vent screw from the oil pump.

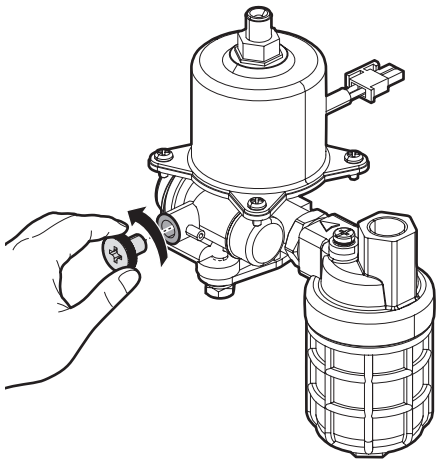

3. Connect Navien's pressure gauge port to the oil pump via the screw hole, and turn on the boiler.

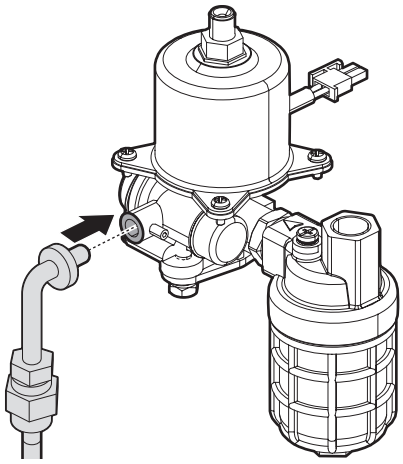

4. Check the pressure using the PCB DIP switch or the panel's forced Min/Max mode. The pressure specification includes Min/Max modes.
5. Refer to the pressure specification table below for the correct values.

Model	21K	26K	34K
Oil Pressure	12–13 bar (Default: 12.5 bar)	12–13 bar (Default: 12.5 bar)	12–13 bar (Default: 12.5 bar)

6. After completing the pressure measurement, reassemble the bolt and check for oil leakage.

6. Flue System

WARNING

Improper flue installation can result in excessive levels of carbon monoxide, which can lead to severe personal injury. Flue installation should be performed only by a licensed professional.

No specific ventilation is required in the room the boiler is installed in. If it is installed in a cupboard or compartment, no specific ventilation is required, providing the aforementioned dimensions are observed. The requirements and recommendations stipulated in the Regulation for Heating Installations in Buildings (RITE) and any other applicable legislation in this field must be observed.

6.1 Flue Terminal Positions

CAUTION

- The terminal must be fitted with suitable protection if it is less than 2 m from a balcony, on a flat roof or surface that could be accessed by people.
- The wall that the gas removal and air intake ducts are fixed to must not be made of combustible or flammable materials. The wall that the end of the duct passes through must lead to the outside of the home. There must be no hazardous materials or obstructions near the duct.
- If the outlet passes through a wall made of combustible material the end terminal must be covered with at least 20 mm of incombustible material and must maintain a distance of at least 50 mm from any flammable material.
- The parts connecting the flue outlet must be correctly joined using sealing gaskets. Ensure that there are no leaks from any part of the removal circuit.
- Switch off the boiler and wait for the pipes to cool down before cleaning the gas removal and air intake ducts.
- The gas removal and air intake ducts must be protected from snow accumulation.

The installation of the flue exhaust and combustion air intake system must be calculated and made by sufficiently qualified and authorised staff. On designing and mounting the installation, all national and local regulations, standards and stipulations applicable at the time of installation must be taken into account.

The minimum distances between the flue exhaust terminal and the building elements must comply with those shown in the following table:

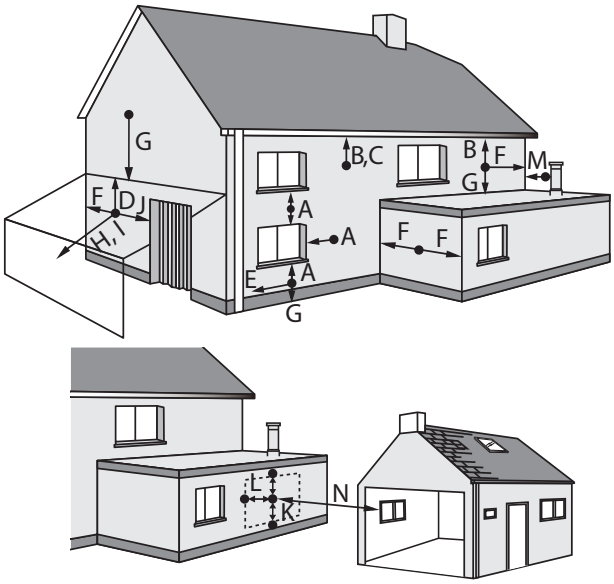

Terminal Position		Minimum Distance (mm)
A	From openings (e.g. doors, windows, ventilation grilles)	300
B	Under a cornice	200
C	Under a gutter or drainpipes	75
D	Under a balcony or car port roof	200
E	From vertical drainpipes	150
F	From internal and external corners of the building	300
G	From the ground, roof and balconies	300
H	When no other outlet is installed	600
I	From the wall with the pipe to the front wall	1200
J	From openings (e.g. doors, windows) under the roof	1200
K	Vertically from a flue	1500
L	Horizontally from a flue	300
M	Vertical flue clearance (Non combustible building material)	500
N	From a front surface with openings	2000

Note

- For vertical flue, the outlet must be at least 60 cm from any opening.
- The dimensions (B, C, D, and E) may be reduced to 25 mm, as long as the flue terminal is extended to clear any overhangs.

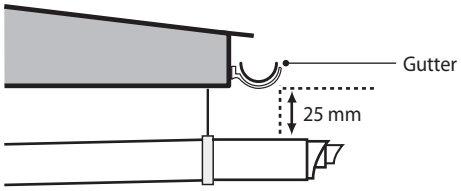

Extended to clear any overhang

6.2 Coaxial Systems

Refer to the following sections for the detailed clearances of the coaxial system types.

6.2.1 Horizontal Coaxial Removal (Type C_{13})

Standard Removal System

When Installing the wall terminal horizontally through the wall, see the following as shown in the figure:

1. A flue terminal weather seal(black) can be fitted on the external flue terminal end.

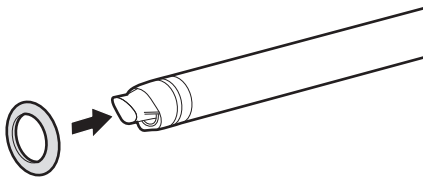

2. Cut the hole for the flue ensuring the hole is horizontal and level. The horizontal flue length must be installer level as the flue pipe inside the terminal is fitted in a 3° fall back to the boiler.

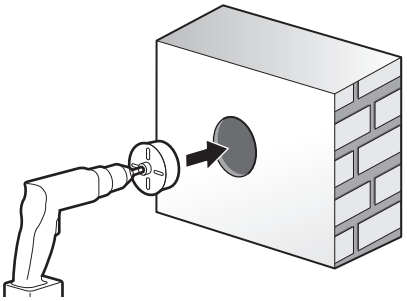
ø105 mm for terminal ø60/100 mm

3. Install the flue horizontally through the wall.

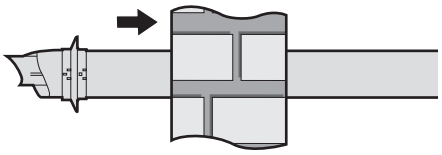

4. Ensure flue weather seal is fitted correctly to ensure a good weathered seal. Then the internal (white) decorative weather seal can be fitted.

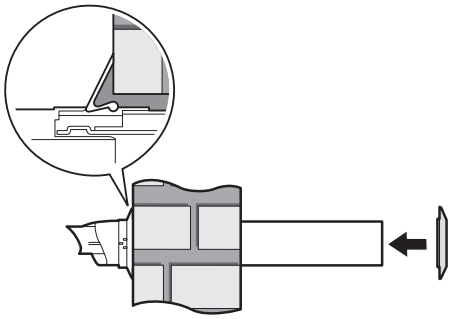

5. Although weather seals can be used, the flue must be installed that prevents lateral movement. The use of sand and cement to seal the flue to the fabric opening of the building would secure the flue as required. The seals can be put over the securing sand and cement as a decorative weather seals.

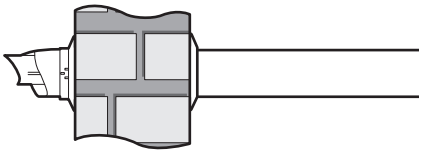

Extended Removal System

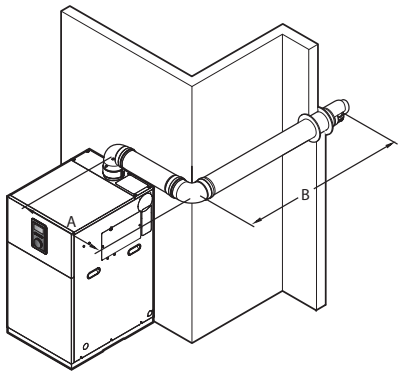

Ø60/100 => Max. length: A+B-(1 x 90°elbow) = 20-1.3 = 18.7 m

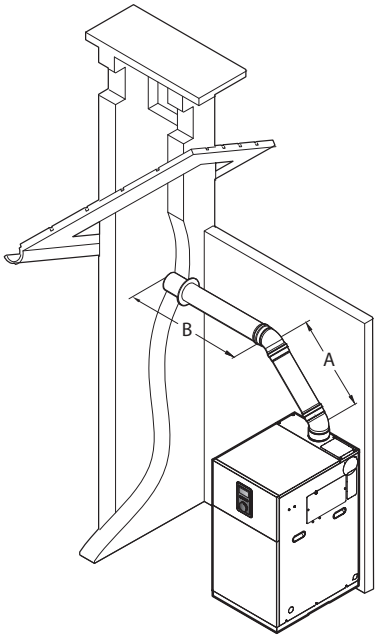

Ø60/100 => Max. length: A+B-(1 x 45°elbow) = 20-1 = 19 m

Pipe Diameter (mm)	Maximum Length (m)	Elbow	Equivalent Length (m)
Ø60/100	20	45°	1.0
		90°	1.3

6.2.2 Vertical Coaxial Removal (Type C_{33})

Standard Removal System

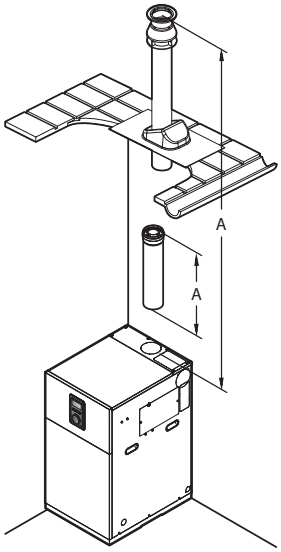

Ø60/100 => Max. length: A=21 m

Extended Removal System

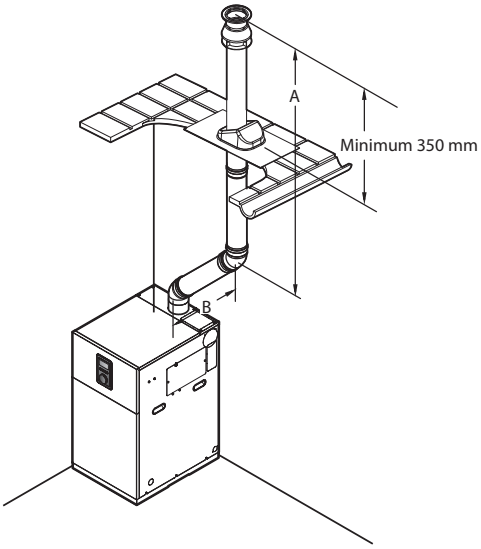

Ø60/100 => Max. length: A+B-(1 x 45°elbow) = 21-1 = 20 m

Pipe Diameter (mm)	Maximum Length (m)	Elbow	Equivalent Length (m)
Ø60/100	21	45°	1.0

6.3 Measuring Flue Length

The gas removal and air intake systems may be oriented in any direction (north, south, east or west). Some special components such as elbows are used to help reach certain positions. Each removal terminal kit includes an adaptor for connection to the boiler and a removal terminal.

The total length of the flues must not exceed the maximum value defined. If the removal installation includes elbows while calculating the total length you must take into account that each elbow has a resistance equal to a specific linear Leq equivalent length (see table).

Carefully study the diagrams representing the different types of removal and select the one that best suits the conditions of your installation. To choose the removal accessories required for each installation, see the list of accessories on the NAVIEN price list.

Maximum Total Length

Type	Pipe Diameter (mm)	Orientation	Maximum Length (m)
Coaxial	Ø60/100	Horizontal	20
		Vertical	21

Equivalent Length of Elbows and Adaptor

Type	Pipe Diameter (mm)	Elbow	Equivalent Length (m)
Coaxial	Adaptor Ø60/100	-	0.5
	Ø60/100	45°	1.0
		90°	1.3

6.4 Wind Deflector

When installing a coaxial flue, the exhaust gas may be sucked into the boiler due to external wind, which may cause misfiring and non-ignition. It is recommended to install the wind deflector included at the end of the flue.

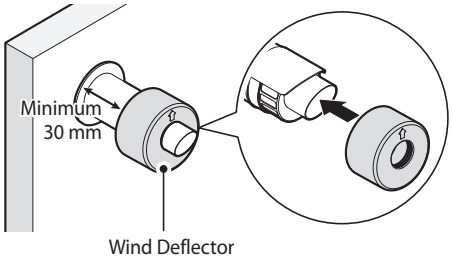

6.5 Terminating the Flue

Before installing the boiler, determine what type of flue termination is appropriate for the installation location and situation. The subsections that follow describe some typical flue configurations.

CAUTION

Minimum Clearance to Metering devices and Relief equipment. Maintain a minimum horizontal clearance of 1.22 m from electric meters, gas meters, regulators, and relief equipment. Do not install the boiler above or below electric meters, gas meters, regulators, or relief equipment unless a 1.22 m horizontal clearance is maintained.

6.6 Fixing the Flue

The Navien flue system used is a push fit flue system, which does not require screws to be fitted at each flue joint.

The flue system must be adequately supported at regular intervals between brackets of no more than 1 m for horizontal sections and no more than 2 m for vertical sections.

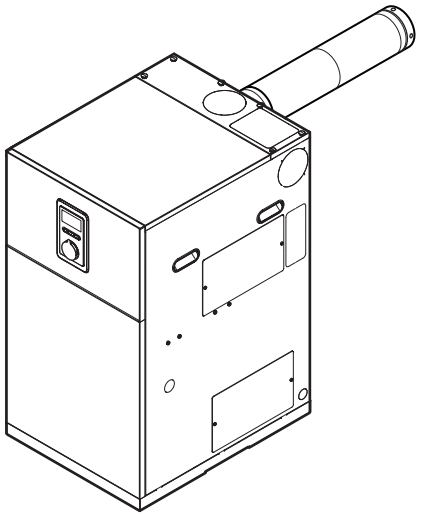

6.7 Installing the Coaxial Vent for the External Model

When installing the coaxial vent for the external model, make sure that only the flue terminal end is exposed, and not the vent pipe itself. Otherwise, wind may cause exhaust gas to backflow, which can lead to product malfunction.

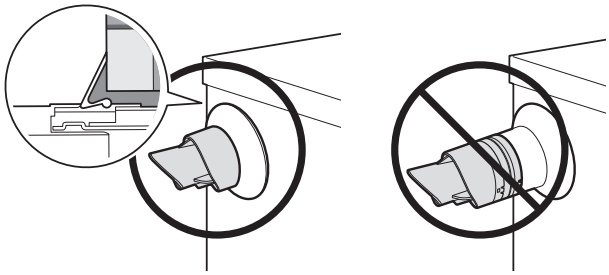

[Correct Installation] **[Incorrect Installation]**

6.8 Preventing Exhaust Gas Backflow

If the coaxial exhaust is installed in a place subject to a headwind, the exhaust gas may flow backwards and result in noise and flame loss.

To prevent exhaust gas backflow, extend the exhaust gas termination to make it longer than a minimum of 300 mm from the intake air termination. If the extended exhaust gas termination is higher than the intake air termination, install a shield on the intake air termination to prevent rain from entering it.

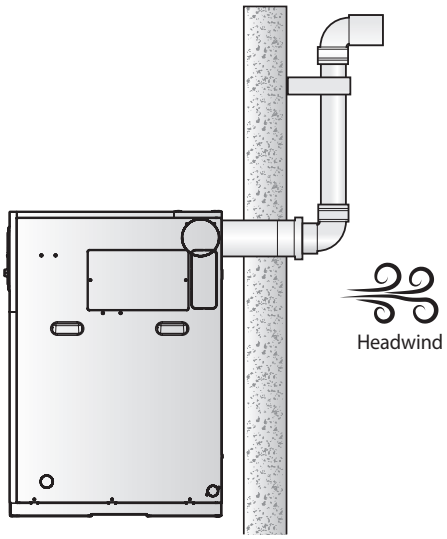

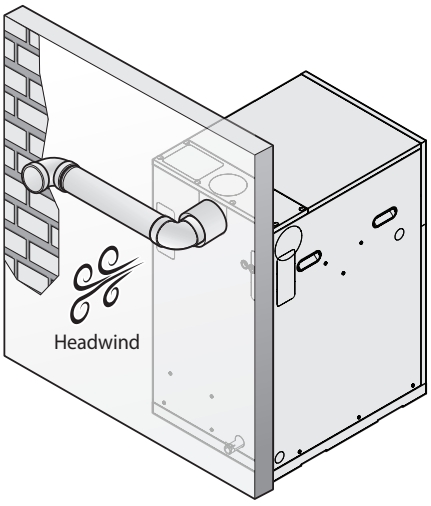

7. Setting the DIP Switches

CAUTION

Do not remove the front cover unless the power to the boiler is turned off or disconnected. Failure to do so may result in electric shock.

The boiler has 2 sets of DIP switches on the PCB and 2 sets of DIP switches on the front panel. DIP switches are used to control the functionality of the boiler. Set the DIP switches appropriately, based on the installation environment.

Note To access the PCB, refer to "9.1 Accessing the PCB" on page 42.

7.1 PCB DIP Switches

DIP Switch 1 (Set of 8)

The DIP SW 1 on the circuit board configures operation status, and boiler model/capacity.

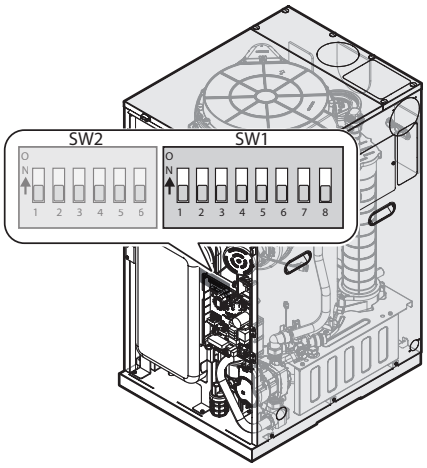

Switch 1	Function	Setting	
1 & 2	Operation status	Normal (Default)	1-OFF, 2-OFF
		Stage 1 (Min)	1-OFF, 2-ON 1-ON, 2-ON
		Stage 2 (Max)	1-ON, 2-OFF
3	Boiler type	Solo (System/Regular)	3-OFF
		Combi	3-ON
4	Not used	Not used	4-OFF
5 & 6	Capacity	21 kW	5-OFF, 6-OFF
		26 kW	5-ON, 6-OFF
		34 kW	5-OFF, 6-ON
7	Not used	Not used	7-OFF
8	Not used	Not used	8-OFF

7.2 Front Panel DIP Switches

DIP Switch (Set of 6)

The DIP SW 2 on the circuit board configures the fuel selection, country, makeup water method, and source of the heat demand.

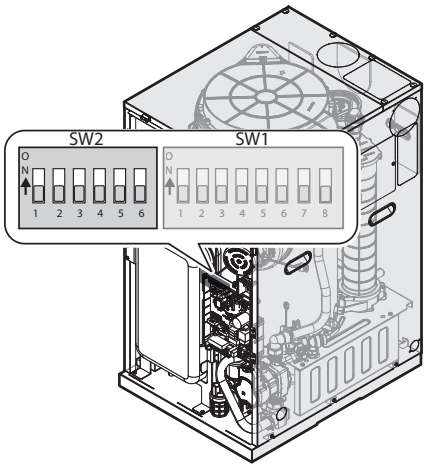

Switch 2	Function	Setting	
1 & 2	Fuel type	Kerosene	1-OFF, 2-OFF
		HVO	1-OFF, 2-ON
3	Not used	Not used	3-OFF
4	Not used	Not used	4-OFF
5 & 6	CH heat demand	Switched live	5-OFF, 6-OFF
		CH thermostat	5-ON, 6-OFF
		OT R/C	5-OFF, 6-ON
		Smart Room Controller (Smart Plus)	5-ON, 6-ON

8. Connecting the Power Supply

WARNING

- Improperly connecting the power supply can result in electrical shock and electrocution. Follow all applicable electrical codes of the local authority having jurisdiction.
- When connecting the boiler to the power supply, do not touch the power cord or internal components of the boiler with wet hands. Doing so may result in electric shock.

Connecting the power supply should be performed only by a licensed professional.

When connecting the power supply, follow these guidelines:

- Do not connect the electric supply until all piping is complete and the boiler has been filled with water.
- Do not connect the boiler to a 110-120 V AC power supply. Doing so will damage the boiler and void the warranty.
- All the Navien LCB boilers are supplied with a factory-installed, 3 core wire (Live, Neutral, Earth). The boiler's current rating is 3 A and can be plugged into any grounded electrical outlet adjacent to the boiler. A dedicated power supply is not required.
- The boiler must be electrically grounded. If wiring the boiler directly to a power supply, do not attach the ground wire to oil or water pipes as plastic pipe or dielectric unions may prevent proper grounding.
- We recommend using a surge protector to protect the boiler from power surges.
- If there is a power failure in cold weather areas, the freeze prevention system in the boiler will not operate and may result in the heat exchanger freezing. In cold areas where power failures are common, you must completely drain the boiler to prevent damage if power cuts last for extended periods. Damage caused by freezing is not covered under warranty.

WARNING

When connecting cables to the boiler through the rubber stopper on the back of the boiler, cut a hole (or an X) into the rubber stopper to ensure the cables can pass through the rubber stoppers. Removing the rubber stoppers and connecting cables to the boiler may damage the cables, due to the boiler housing's sharp edges, and result in electric shock.

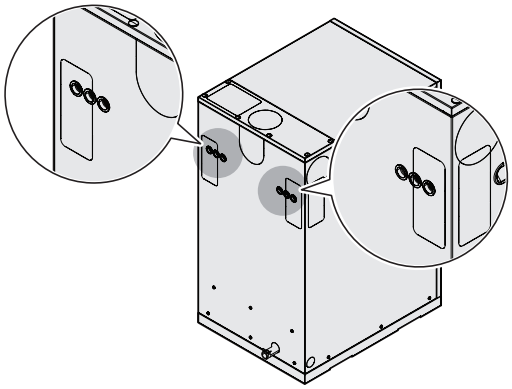

CAUTION

Label all wires before disconnecting them when you work on the controls. Wiring errors can cause improper and dangerous operation. Verify proper operation after servicing.

9. Connecting Electrical Supplies

WARNING

Improperly connecting the electrical supplies can result in electrical shock and electrocution. Follow all applicable electrical codes of the local authority having jurisdiction. Connecting the electrical components should be performed only by a licensed professional.

DANGER

- You must ensure that the boiler is disconnected from the electrical supply before carrying out any servicing inside the boiler and, particularly, on the electric terminal strips.
- If the electrical supply is connected electrical contact could occur, causing serious damage due to electrocution.

CAUTION

Label all wires before disconnecting them when you work on the controls. Wiring errors can cause improper and dangerous operation. Verify proper operation after servicing.

The boiler electrical connections must be made by sufficiently qualified staff in strict compliance with the sections below and with any electrical safety regulations applicable at the time of installation.

Note The LCB500 boiler has an electrical protection degree of IPX5D. The electrical connection must be made via a bipolar switch located on the same premises as the boiler. The switch must have a minimum pole separation of 3 mm.

9.1 Accessing the PCB

DANGER

You must ensure that the boiler is disconnected from the electrical supply before carrying out any servicing inside the boiler and, particularly, on the PCB.

To access the PBA, carefully follow the steps below:

1. Turn off the power supply to the boiler.
2. Remove the upper-front cover from the boiler by pulling it toward you.

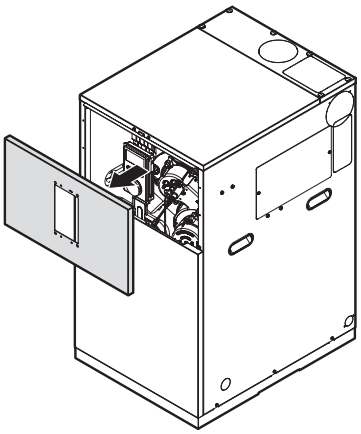

3. Remove the 2 screws securing the lower-front cover, and then remove the cover from the boiler.

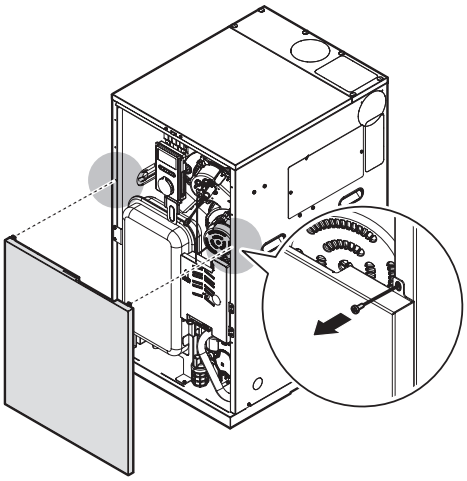

4. Remove the screw from the PCB cover and flip the cover open.

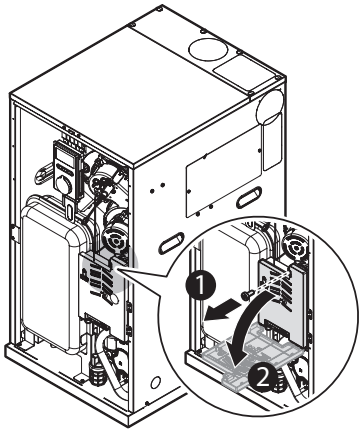

9.2 About the PCB

Refer to the following illustration for the PCB wiring description.

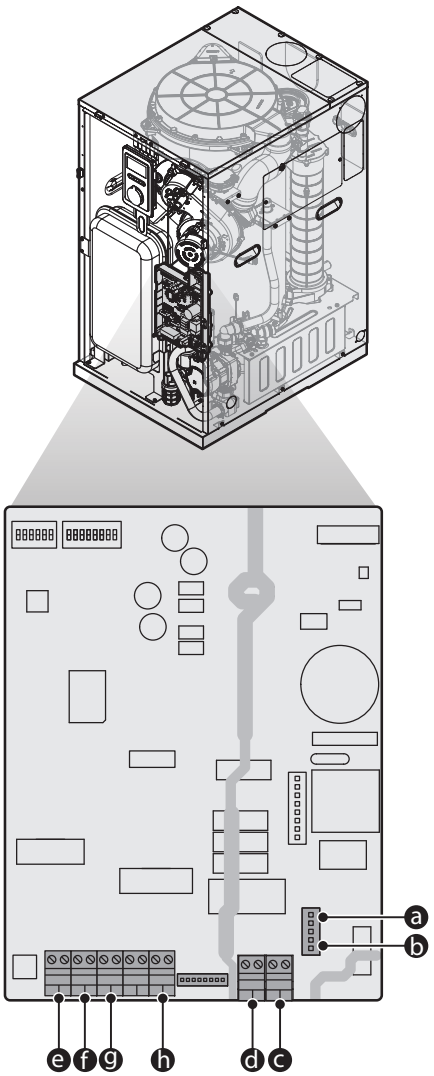

Part	Ref	Applications
AC application	a	• Combi: 3-way valve (Internal) • System/Regular: DHW valve
	b	• System/Combi: Internal recirculation pump • Regular: External recirculation pump
	c	System/Regular: CH valve
	d	Switched Live
AC application	e	OT Roomcon (OpenTherm)
	f	Cylinder stat
	g	CH stat
	h	Outdoor temperature sensor

9.3 Setting the Heating Demand

Set the heating demand on the DIW switch. To use the DHW tank, control the panel for DHW settings.

9.3.1 CH Demand Setting

The DIP SW on the circuit board that configures source of the heat demand is listed in the following table.

Switch2	Function	Setting	
5 & 6	CH heat demand	Switched live	5-OFF, 6-OFF
		CH thermostat	5-ON, 6-OFF
		OT R/C	5-OFF, 6-ON
		Smart Plus	5-ON, 6-ON

9.3.2 DHW Tank Demand Setting (System/ Regular)

You can set the DHW tank demand on the 4-3 DHW Call Signal menu.

Item	Description
4-1 DHW Thermostat	Cylinder stat
4-2 Wiring Centre	When VCU-10R (wiring centre) is connected to the boiler

Note The 4-2 Wiring Centre menu is displayed only when the CH heat demand is set to Smart Plus and the wiring centre (VCU-10R) is connected to the boiler.

9.4 Connecting Applications - Low Voltage (DC) Application Part

These connections are low voltage DC only and 240 V AC is not to be fitted to these terminals. Doing so may damage the PCB and will not be covered under warranty.

9.4.1 Connecting the OpenTherm

The boiler is designed to be connected to an OpenTherm. The OpenTherm cables are to be connected to the CN10 in the low voltage (DC) application part.

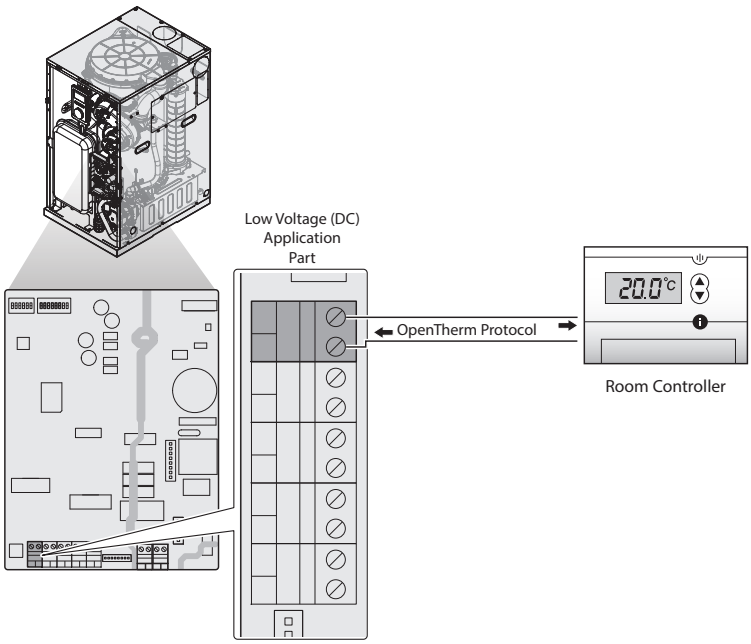

Note OpenTherm® is an industry standard modulating control available from several control manufacturers and the LCB500 boiler has an OpenTherm® interface. This enables our modulating range of OpenTherm® room controls to be connected without any further modifications.

9.4.2 Connecting the Cylinder Stat

The boiler is designed to be connected to a cylinder stat. The thermostat cables are to be connected to the CN10 in the low voltage (DC) application part.

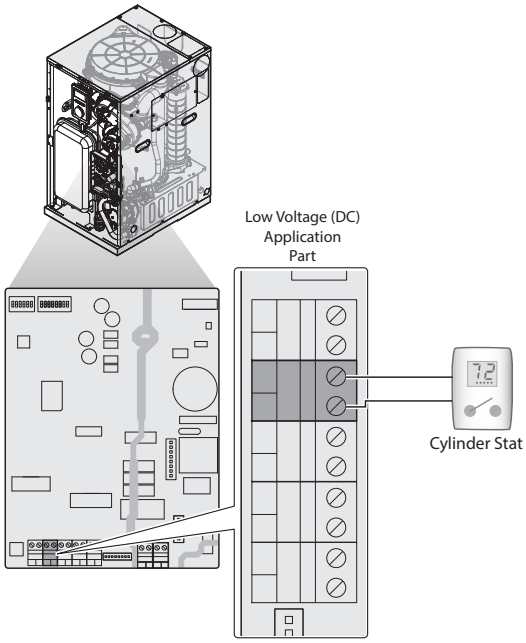

9.4.3 Connecting the CH Thermostat

The boiler is designed to be connected to a CH thermostat. The CH thermostat cables are to be connected to the CN10 in the low voltage (DC) application part.

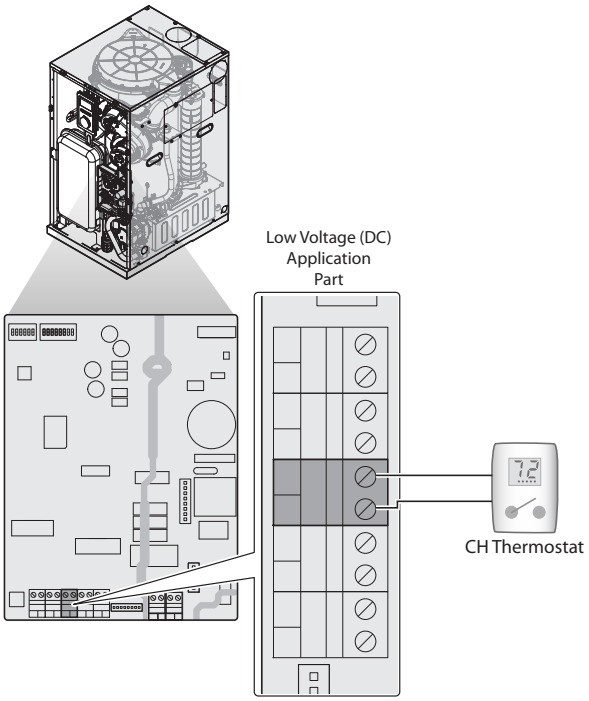

9.4.4 Connecting the Outdoor Temperature Sensor

The boiler is designed to be able to function with an outdoor temperature sensor. The sensor cables are to be connected to the CN10 in the low voltage (DC) application part.

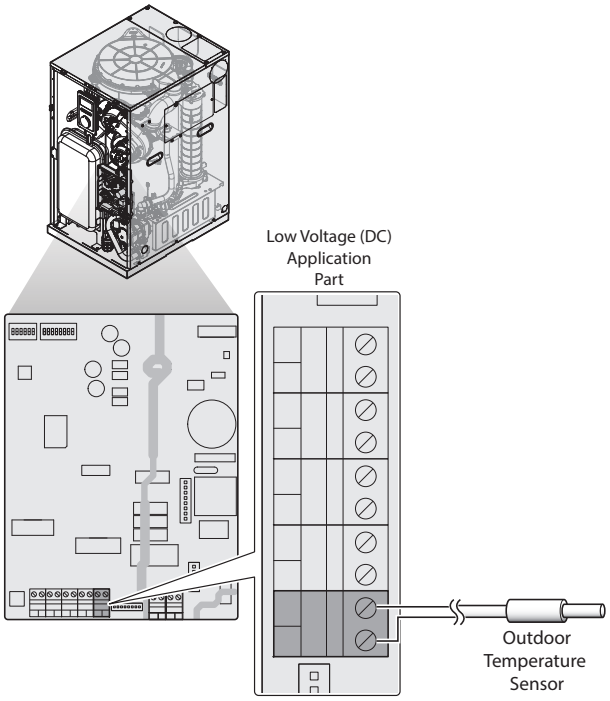

9.5 Connecting Applications to the AC Application Part

9.5.1 Connecting the 2 Port Diverter Valve (CH)

The boiler is designed to be connected to a 2 port diverter valve (CH). The valve cables are connected to the terminals 1 (L) and 2 (N) of the CN12 in the AC application part. It only operates when there is an operating signal from the CH thermostat.

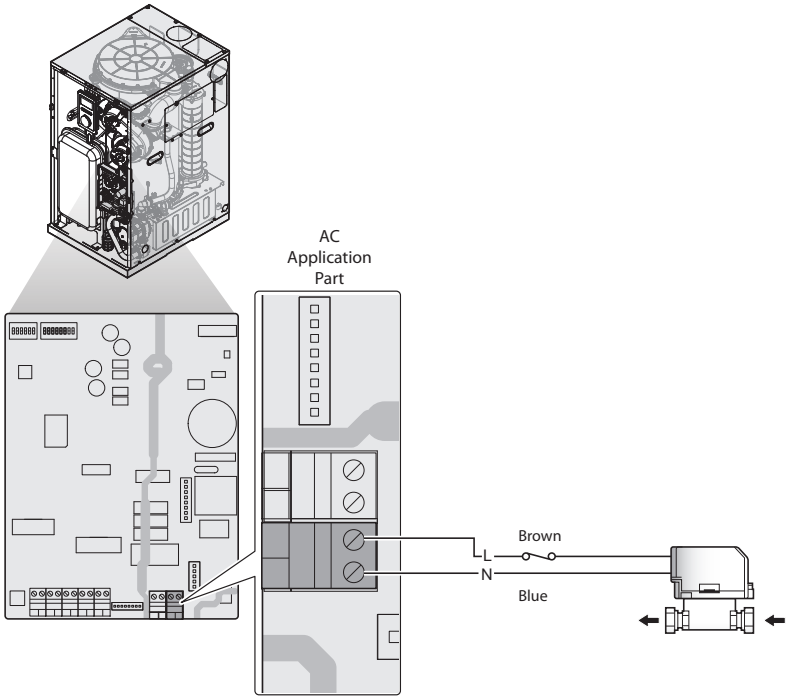

9.5.2 Connecting the 2 Port Diverter Valve (DHW)

The boiler is designed to be connected to a 2 port diverter valve (DHW). The valve cables are connected to the terminals 1 (L) and 3 (N) of the CN9 in the AC application part. It only operates when there is an operating signal from the cylinder stat.

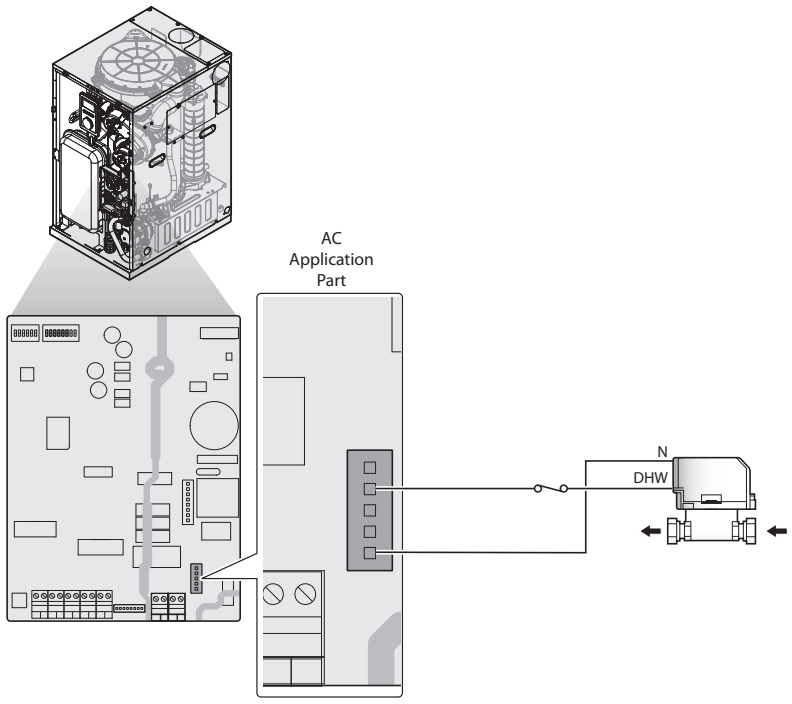

9.5.3 Connecting the 3 Port Diverter Valve

The boiler is designed to be connected to a 3 port diverter valve. The valve cables are connected to the terminals 1 (L) and 2 (N) of the CN12 in the AC application part. It only operates when there is an operating signal from the cylinder stat or CH thermostat.

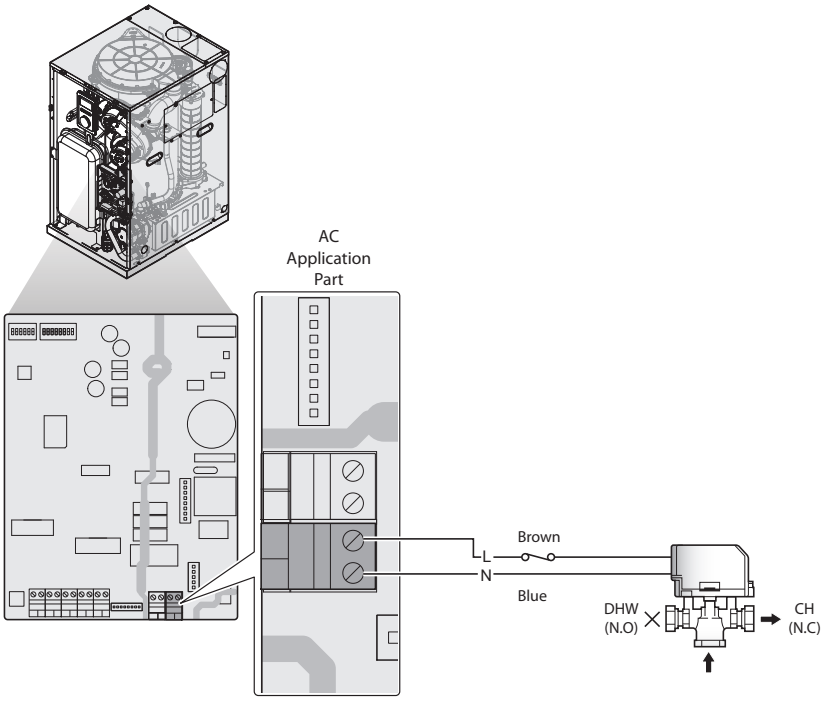

9.5.4 Connecting the 3 Way Valve (Type C Contact)

The boiler is designed to be connected to a 3 way valve (Type C Contact). The valve cables are connected to the terminals DHW, CH and N of the CN9 in the AC application part. It only operates when there is an operating signal from the cylinder stat or CH thermostat.

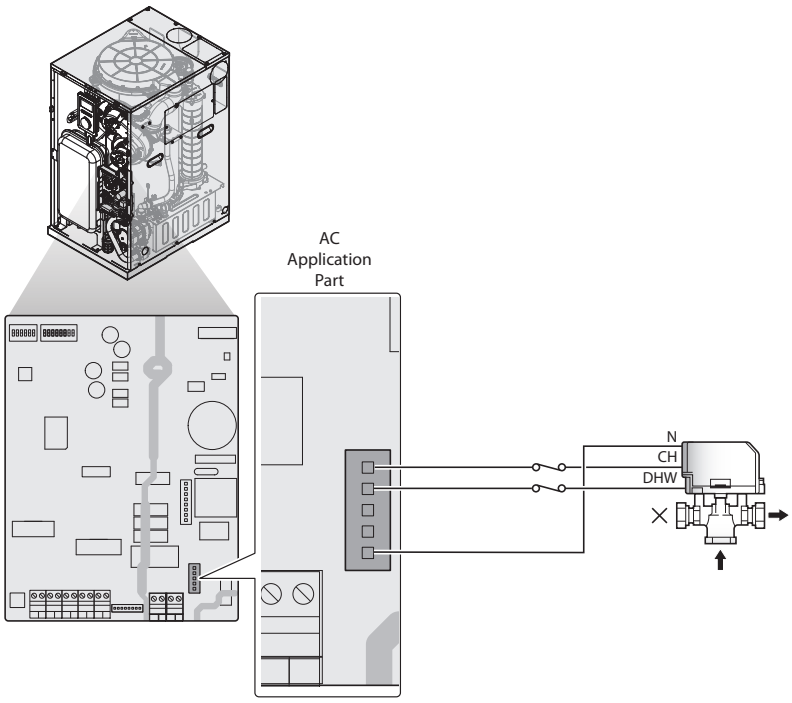

10. Installation Check list

After installing the boiler, review the following checklist. Complete the boiler start-up process by carrying out the checks listed in the table below.

If you have additional questions or need assistance with installation, contact an official Technical Assistance Service (TAS), or refer to the technical support section of Navien's website (www.navien.co.uk).

Installing the Boiler	Yes	No
Have you maintained the proper service and maintenance clearances?		
Is the boiler and flue piping clear of combustible materials, including clothing, cleaning materials, and rags?		

Connecting the Space Heating Piping	Yes	No
Did you flush the system to prevent any deposits, fluxes, solder, scale, debris, or other impurities that could harm the boiler before connecting the heating pipe to the boiler?		
Has the system been filled (more than 1 bar and less than 1.5 bar) and purged of air?		
Is there an expansion tank installed and set to the proper system pressure?		
If antifreeze has been used, is it the proper type and is the concentration appropriate?		
Did you install an automatic bypass valve of at least 6ℓ/min when connected to radiators with thermostatic valves?		
Did you check for leaks in space heating piping?		
Is the exposed outdoor heating pipe properly insulated?		

Connecting the Pressure Relief Valve	Yes	No
Have you installed an approved pressure relief valve on the boiler?		
Does the rating of the pressure relief valve match or exceed the maximum bar rating of the boiler?		

Connecting the Condensate Drain	Yes	No
Has all condensate pipework been installed to 'fall' from the appliance by a minimum of 3 degrees (52 mm per metre) to ensure adequate condensate flow?		
Have you ensured that air is returned to the unit in the pipework work path for the condensate trap to function properly?		
If you connected to a rainwater pipe, did you block the air flow?		
Are the external piping as short as possible and not more than 3 meters in length?		
Is the external piping ideally isolated by increasing the minimum diameter to 32 mm and insulated?		

Connecting the Oil Supply	Yes	No
Is the fuel used Kerosene?		
Did you use a galvanised pipe as the fuel line?		
Did you install a fire valve?		
If the oil line was installed with a single pipe, did the oil tank be installed more than 300 mm above the oil pump?		
Did you check for leaks in oil supply piping?		

Flue System	Yes	No
Have you flued the boiler in accordance with all local codes and the guidelines in this manual?		
Are the outlets and horizontal flues of the flue sloping upwards (about 3 degrees)?		
Are the air intake and flue connections on the lines correctly sealed?		
Is the total flue length within the maximum length restriction?		
Is the flue system supported as per current regulations?		
Did you check for leaks in flue system?		

Connecting the Power Supply	Yes	No
Is the supplied voltage 220-230 V AC?		
Is the ground wire properly connected?		

Operating the Boiler	Yes	No
Is the DIP switch on the controller PCB set for the model?		
Have you given the Installation & Operation Manual to the owner for future reference?		

11. Operating the Boiler

11.1 Using the Front Panel

The front panel allows you to adjust the temperature and view the operating status or error codes. Remove the protective film from the front panel before using it.

11.1.1 Icons and Digital Display

The icons and digital display on the front panel provide important information required for the boiler's operation. Refer to the following table for detailed information.

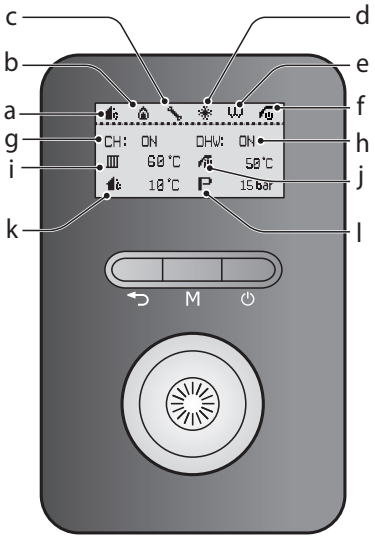

a		**Outdoor temperature compensation (OTC)** Displayed when the outdoor temperature compensation (OTC) is enabled.	**b**		**Combustion** Displayed when the burner is combusting.
c		**System fault** Displayed when a system fault is detected.	**d**		**Frost protection** Displayed when the boiler is operating in anti-freeze mode.
e		**Schedule programming mode** Displayed when the boiler's schedule programming operation is set.	**f**		**DHW preheat** Displayed when the DHW preheat feature is enabled. (Combi Model Only)  Always On  Weekly  Intelligent
g		**Central heating demand** Indicates the central heating demand is present.	**h**		**DHW demand** Indicates that DHW demand is present.
i		**Central heating set temperature** When the central heating temperature is set: Displays the currently set central heating temperature. When the central heating temperature is not set: Displays the current supply water temperature.	**j**		**DHW set temperature** When the DHW temperature is set: Displays the currently set DHW temperature. When the DHW temperature is not set: Displays the current supply water temperature when using the DHW thermostat. Displays the current DHW tank temperature when using the DHW sensor.
k		**Outdoor temperature** Displays the outdoor temperature.	**l**		**System pressure** Displays the internal water pressure of the boiler system.

11.1.2 Buttons and Command Dial

Using the buttons and the Command dial on the front panel, you can turn on or off the boiler, monitor the current operation status, and set the values required for the boiler's operation, such as central heating and DHW supply temperatures. Refer to the following table for detailed information.

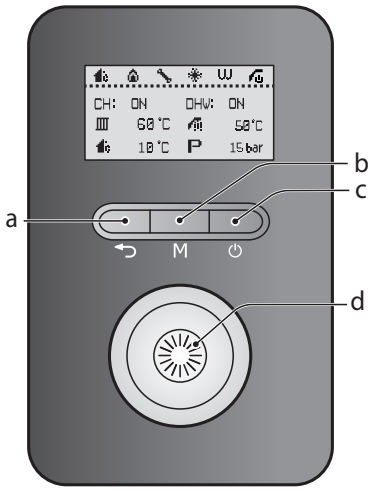

a	⮌	**Back button** Return to the previous menu or screen.	b	M	**Mode button** Enter the boiler's main menu.
c	⏻	**Power button** Press and hold for at least 3 seconds to turn on or off the boiler.	d	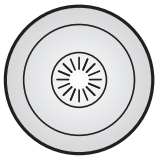	**Command dial** Rotate to switch between menu items, or to increase/decrease values. Press to make a selection or to confirm changes.

11.2 Turning the Boiler On or Off

To turn the boiler on or off, press the Power button (⏻) for 1 second.

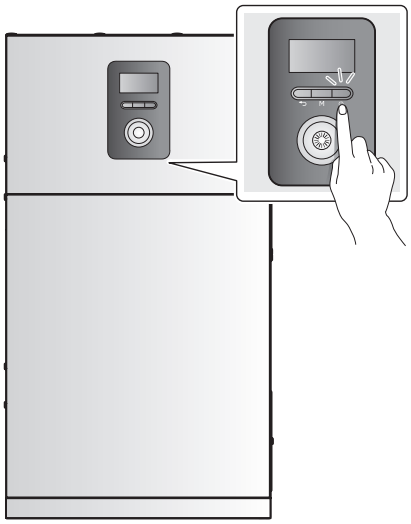

When the power is on, the boiler automatically enters normal operation mode, and the boiler's operating conditions are displayed on the screen.

Note

- The boiler status icons remain displayed when the boiler is turned off.
- To prevent formation of soot, the minimum running time of the burner in the boiler is 2 minutes and 30 seconds. Therefore, if you turn off the boiler within 2 minutes and 30 seconds of it being turned on, the burner does not stop running immediately.

11.3 Adjusting the Temperature

11.3.1 Adjusting the Central Heating Temperature

To adjust the heating temperature:

1. In normal operation mode, rotate the Command dial (◎) . The central heating temperature (▥) is highlighted on the screen.

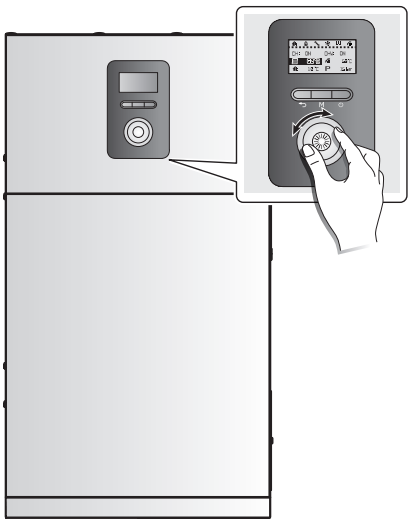

2. Press the Command dial (◎) to select the central heating temperature (▥). The highlighted section will flash.



3. Rotate the Command dial (◎) to the right or left to increase or decrease the temperature.
4. Press the Command dial (◎) to confirm the new temperature.
5. Press the Back button (⮌) to return to normal operation mode, or rotate the Command dial (◎) to adjust other operation conditions.

You can adjust the temperature while the highlighted section is flashing. Once the flashing stops, the current temperature setting is stored.

Note

- The central heating temperature cannot be adjusted when the Outdoor Reset Control is used.
- The central heating temperature cannot be adjusted if the boiler is operating as a sub unit in a cascade system. The main unit's set temperature will be displayed on the screen.
- In case of outdoor reset sensor malfunction, the boiler will operate at this set temperature.
- Take note of the original heating temperature in case you want to restore it to the default.
- The default central heating supply water temperature range is 40°C (Absolute MIN) to 85°C (Absolute MAX).
- The default central heating return water temperature range is 30°C (Absolute MIN) to 65°C (Absolute MAX).
- You can adjust the temperature ranges in the parameter settings menu.
- The boiler will retain your settings during a power outage.

11.3.2 Adjusting the DHW Temperature

To adjust the water temperature:

1. In normal operation mode, rotate the Command dial (). The central heating temperature () is highlighted on the screen.

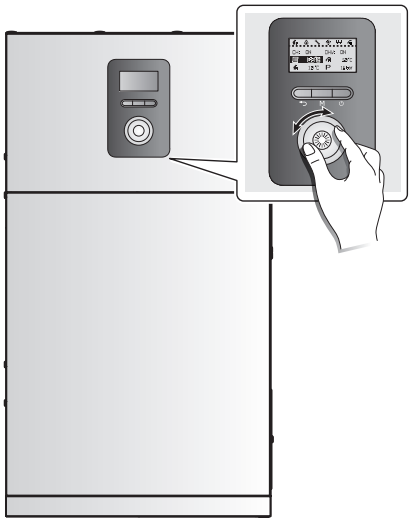

2. Rotate the Command dial () to the right to select the DHW temperature ().

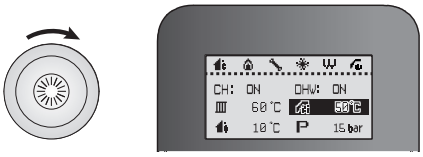

3. Press the Command dial () to select the indirect DHW temperature (). The highlighted section will flash.



4. Rotate the Command dial () to the right or left to increase or decrease the temperature.
5. Press the Command dial () to confirm the new temperature.
6. Press the Back button () to return to normal operation mode, or rotate the Command dial () to adjust other operation conditions.

You can adjust the temperature while the display is flashing. Once the display stops flashing, the current temperature setting is stored.

Note

- Take note of the original DHW indirect supply temperature in case you want to restore it to the default.
- The default DHW temperature range is 40°C (Absolute MIN) to 85°C (Absolute MAX).
- You can adjust the temperature ranges in the parameter settings menu.
- The boiler will retain your settings during a power outage.
- System/Regular boilers: The default DHW Supply Temperature range is 40°C (Absolute Min) to 85°C (Absolute Max).
- Combi boilers: The default DHW Temp range is 30°C (Absolute Min) to 60°C (Absolute Max).

11.3.3 Resetting the Boiler

If an error message appears during boiler operation, reset the boiler to resolve the problem. Press the Back button (⮌) on the front panel to reset the boiler.

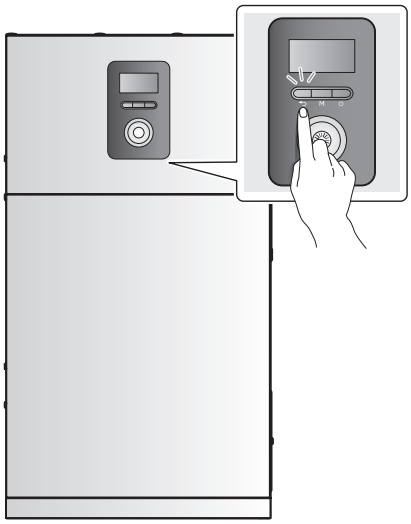

If resetting the boiler does not solve the problem, refer to the Troubleshooting section of this manual or contact Technical Support at 0844 332 2323.

11.4 Accessing Basic Menu Items

In the Main Menu screen, you can view the boiler's operating conditions, configure the central heating and DHW temperatures, and review error history. Press the Menu button (M) to enter the Main Menu screen.

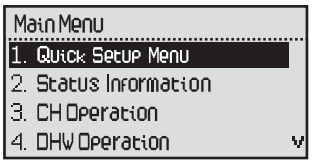

11.4.1 Quick Setup Menu

The Quick Setup Menu is designed to help configure the boiler settings after installation is complete. To enter the Quick Setup Menu, press the Menu button (M), and select "1.Quick Setup Menu".

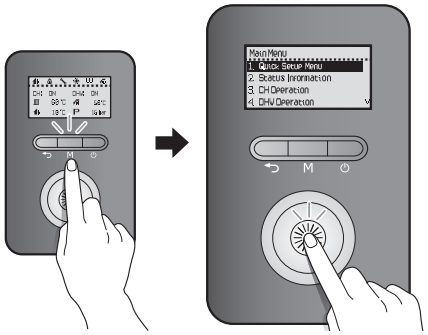

Press the Back button (⮌) to return to the previous screen.

System/Regular Models

Item	Description
1. DHW ON/OFF	Set the DHW operation.
2. Time Setting	Set the system clock (RTC). • Display format: YYYY.MM.DD/ HH:MM:SS

Combi Models

Item	Description
1. Time Setting	Set the system clock (RTC). • Display format: YYYY.MM.DD/ HH:MM:SS

11.4.2 Viewing Basic Information

To view information about the boiler, press the Menu button (M), and then select "2. Status Information".

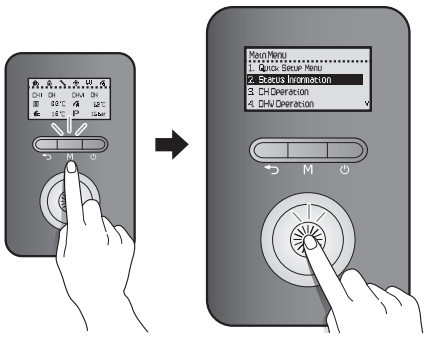

Rotate the Command dial ( ) to switch between the information items. Press the Command dial ( ) to select an item and view the information.

Press the Back button ( ) to exit information view mode.

System/Regular Models

Item	Description
1. Operation State	Current Operation State
2. Heat Capacity	Heat capacity (%)
3. CH Set Temp	Central heating set temperature (°C)
4. DHW Set Temp	DHW indirect supply set temperature (°C)
5. Supply Temp	Heating supply temperature (°C)
6. Outdoor Temp	Outdoor temperature (°C)
7. Water Pressure	Water pressure (bar)
8. Flame Value	Flame detector AD value • Flame On: 8bit AD values equal to or lower than 140 • Flame Off: 8bit AD values equal to or higher than 150
9. Fan Target RPM	Set the fan speed (RPM)
10. Fan Current RPM	Current fan speed (RPM)
11. Oil Pump Target MV	Target oil pump mv (MV)
12. Exhaust Temp	Exhaust temperature (°C)
13. OTC ON/OFF	OTC Status (Enable/Disable)
14. K-Factor Set Value	K-Factor for the OTC
15. Model	Model type
16. Type	Boiler type
17. Oil	Oil type
18. Main F/W ver	Main firmware version
19. Panel F/W Ver	Panel firmware version

Combi Models

Item	Description
1. Operation State	Current Operation State
2. Heat Capacity	Heat capacity (%)
3. CH Set Temp	Central heating set temperature (°C)
4. DHW Set Temp	DHW set temperature(°C)
5. Supply Temp	Heating supply temperature (°C)
6. Outdoor Temp	Outdoor temperature (°C)
7. Inlet Temp	Inlet temperature(°C)
8. DHW Temp	DHW temperature(°C)
9. Outlet2 Temp	DHW outlet2 temperature(°C)
10. Flow Rate	Water flow rate (LPM)
11. Flame Value	Flame detector AD value • Flame On: 8bit AD values equal to or lower than 140 • Flame Off: 8bit AD values equal to or higher than 150
12. Fan Target RPM	Set the fan speed (RPM)
13. Fan Current RPM	Current fan speed (RPM)
14. Oil Pump Target MV	Target oil pump mv (MV)
15. Exhaust Temp	Exhaust temperature (°C)
16. OTC ON/OFF	OTC Status (Enable/Disable)
17. K-Factor Set Value	K-Factor for the OTC
18. Model	Model type
19. Type	Boiler type
20. Oil	Oil type
21. Main F/W ver	Main firmware version
22. Panel F/W Ver	Panel firmware version

11.4.3 Setting the CH Operation

To set the boiler's central heating operation, press the Menu button (M), and then select "3. CH Operation".

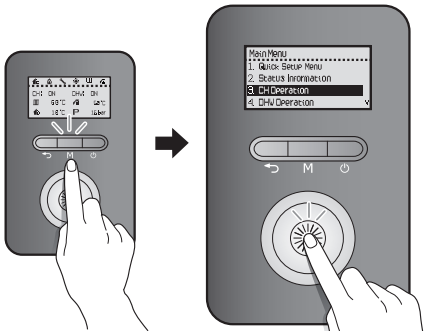

Rotate the Command dial (⊛) to switch between the list items or to increase/decrease setting values. Press the Command dial (⊛) to select an item or to confirm after making changes.

Press the Back button (⮌) to return to the previous screen or menu.

Item	Description
1. CH ON/OFF	Enable or disable central heating operation. • Setting range: Enable/Disable • Default: Enable
1-1 CH Set Temp	Set the central heating target temperature (°C) • Setting range: 40-85°C • Default: 85°C This option is available only when "1. CH ON/OFF" is set to "Enable".
2. OTC ON/OFF	Enable or disable the outdoor temperature compensation control option.
2-1 K-Factor*	K-Factor for the central heating
2-2 WWSD Temp	Set the Warm Weather Shut-down temperature. • Setting range: OFF, 10°C – 40°C • Default: OFF
2-3 WWSD On Diff	Set the differential temperature to deactivate the Warm Weather Shutdown. • Setting range: 1°C – 20°C • Default: 3°C

* When the boiler is connected to an outdoor temperature sensor (optional), functioning may be activated according to outdoor temperature conditions and K-factor values using the parameters.

The graph shows how the set temperature is determined. K-factor values can be set using the front panel or the Smart Room Controller.

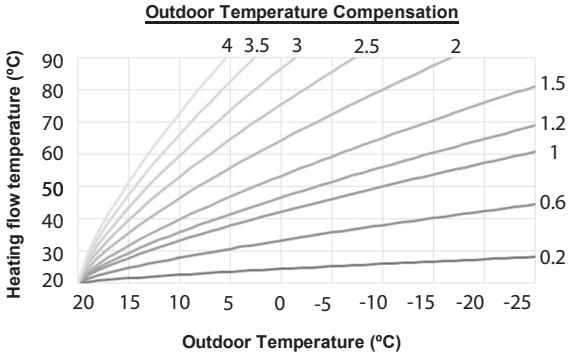

If there is an input from the outdoor temperature sensor, OTC (Outdoor Temperature Compensation) control will be enabled automatically. Also, if there is no input from the outdoor temperature sensor, OTC control will be disabled automatically.

OTC control can be enabled or disabled by the room thermostat signals. If the room thermostat is on (short), and the set supply water temperature calculated by the outdoor temperature and the K-factor values is above 30°C, OTC control is enabled. If the set supply water temperature is below 30°C, OTC control is disabled.

11.4.4 Setting the DHW Operation

To set the boiler's indirect (System/Regular) or direct (Combi) DHW operation, press the Menu button (M), and then select "4. DHW Operation".

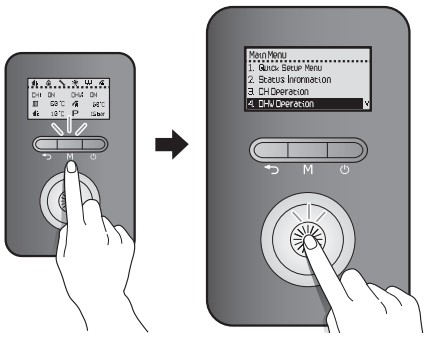

Rotate the Command dial (◎) to switch between the list items or to increase/decrease setting values. Press the Command dial (◎) to select an item or to confirm after making changes.

Press the Back button (⮌) to return to the previous screen or menu.

System/Regular Models

Item	Description
1. DHW ON/OFF	Set the DHW operation.
2. DHW Supply Set Temp	Set the DHW tank supply water temperature. • Setting range: 40 – 85°C • Default: 85°C
3. DHW Priority Time	DHW priority time • Range: 0 – 180 min • Default: 30 min
4. Cylinder Control	Select a device for sensing the DHW demand. 1. Cylinder Stat 2. Wiring Centre: This option is available only when CH Demand is set to Smart Plus.

Combi Models

Item	Description
1. DHW Supply Set Temp	Set the DHW tank supply water temperature. • Setting range: (DHW Set Temp + 30°C) – 85°C • Default: 85°C
2. DHW Set Temp	Set the DHW temperature. • Setting range: 30 – 60°C • Default: 50°C

* DHW Priority Time refers to the time duration that the boiler will give priority to DHW over central heating (Combi boiler only).

11.4.5 Setting the Schedule Programming Operation

To set the boiler's schedule programming operation, press the Menu button (M), and then select "5. Schedule Programming".

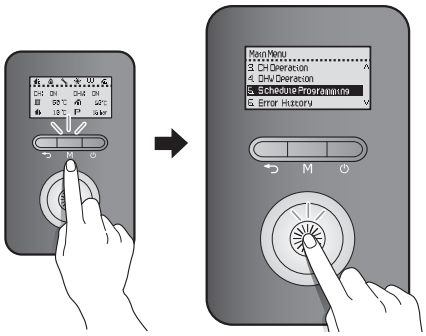

Rotate the Command dial (◎) to switch between the list items or to increase/decrease setting values. Press the Command dial (◎) to select an item or to confirm after making changes.

Item	Description
1. CH Schedule	Set the central heating weekly timer.
2. DHW Schedule	Set the DHW tank (System/Regular) or DHW PreHeat (Combi) Weekly Timer.
3. Schedule Check	Check the weekly schedule.

Note To select this option, you must set up the Time settings in the Configuration menu.

If you select an item, you can select the certain day to schedule the central heating or DHW modes.

System/Regular Models - Central Heating or DHW Mode

Item	Description
1. 7 Day	Schedule a command for each day of the week.
2. 5 + 2 Day	Schedule a command for weekday and weekend.
3. 5 + 1 + 1 Day	Schedule a command for weekdays, Saturdays, and Sundays.
4. OFF (Not Used)	Disable the schedule function.

Combi Models - Central Heating Mode

Item	Description
1. 7 Day	Schedule a command for each day of the week.
2. 5 + 2 Day	Schedule a command for weekday and weekend.
3. 5 + 1 + 1 Day	Schedule a command for weekdays, Saturdays, and Sundays.
4. OFF (Not Used)	Disable the schedule function.

Combi Models - DHW Mode

Item	Description
1. Always On	Preheat always ON.
2. Intelligent	The boiler analyzes your hot water consumption pattern and preheats the water when the set conditions are met.
3. Weekly	Set the DHW mode settings to be the same as space heating mode.
4. OFF (Not Used)	Disable the schedule function.

Set the Weekly Schedule

When setting up the Weekly option, select 'Weekly,' and select between 1 Day, 3 Day, and 7 Day to go to the Schedule menu.

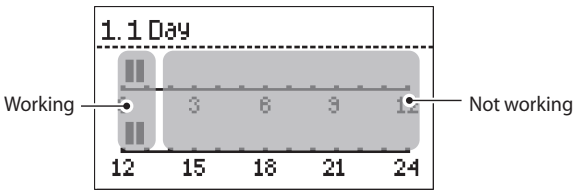

Rotate the Command dial (⊛) to choose the scheduled time. You can choose the time in 30 minutes intervals.

11.4.6 Viewing Error History

To view the error history, press the Menu button (M), and then select "6. Error History".

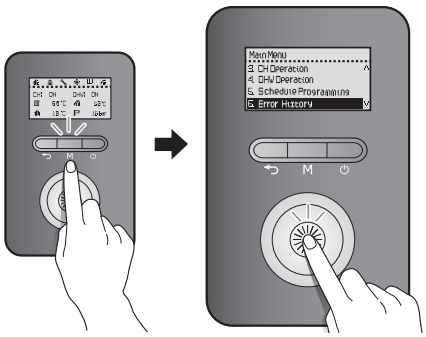

A list of 10 recent errors is displayed on the screen, with the most recent error displayed at the top of the list.

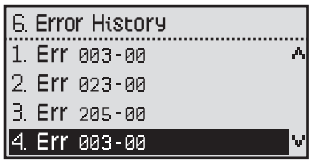

Rotate the Command dial (⊛) to switch between the list of errors. Press the Command dial (⊛) to select an error to view detailed information.

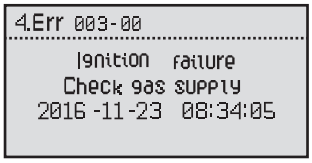

Press the Back button (↩) to return to the previous screen or menu.

Note

- The front panel display flashes in red and the error icon is displayed (flashing) when a level 1 error is detected. You can press the Command dial (⊛) to enter error display mode. Boiler operation is maintained during a level 1 error.
- A level 1 error is automatically cleared when the problem is resolved.

11.4.7 Viewing Other System Information

To view the miscellaneous system information, press the Menu button (M), and then select "7. EMS Data".

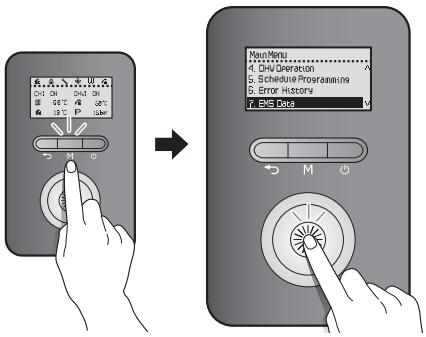

Rotate the Command dial (⊛) to switch between the information items. Press the Command dial (⊛) to select an item and view the information.

Press the Back button (⮌) to return to the previous screen or menu.

Item	Description
1. CH Operation Time	View monthly central heating operation logs.
2. DHW Operation Time	View monthly DHW operation logs.
3. Oil Consumption	View monthly oil consumption.

11.4.8 Setting the Display Options

To set the front panel display options, press the Menu button (M), and then select "8. Configuration".

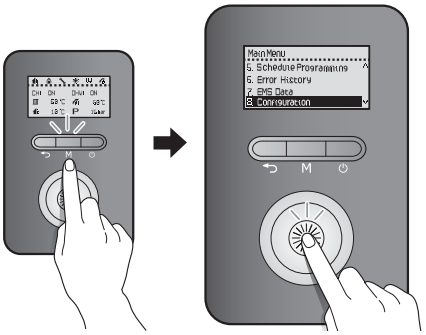

Rotate the Command dial (⊛) to switch between the list items or to increase/decrease setting values. Press the Command dial (⊛) to select an item or to confirm after making changes.

Press the Back button (⮌) to return to the previous screen or menu.

Item	Description
1. Language	Select the display language. 1. English • Default: English
2. °C/°F Setting	Select the temperature unit. 1. Celsius (°C) 2. Fahrenheit (°F) • Default: Celsius (°C)
3. PSI/BAR Setting	Select the water pressure unit. 1. PSI 2. BAR • Default: BAR
4. Time Setting	Set the system clock (RTC). • Display format: YYYY.MM.DD/ HH:MM:SS
5. Backlight Time Setting	Set the backlight time. • Setting range: 0 – 60 sec • Default: 10 sec
6. Sound Setting	Set the sound ON/OFF • Setting range: ON/OFF • Default: ON

11.5 Accessing Advanced Menu Items

11.5.1 Viewing Service Information

To view service information about the boiler, press the Back button (⮌) and the Menu button (M) simultaneously for 3 seconds, and then select "1. Service Status Info".

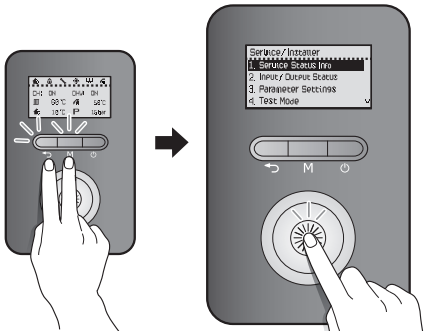

Rotate the Command dial (◎) to switch between the information items. Press the Command dial (◎) to select an item and view the information.

Press the Back button (⮌) to return to the previous screen or menu.

Item	Description
1. Elapsed Time After Install	Elapsed time since installation
2. HEX Overheat - No. of Times	Number of times the heat exchanger high limit stat has activated
3. Flame Loss - No. of Times	Number of times a flame loss/misfire has occurred
4. 2nd ignition - No. of Times	Number of second ignition attempts
5. 3rd ignition - No. of Times	Number of third ignition attempts

11.5.2 Viewing Input and Output Status

To view the boiler's input and output status, press the Back button (⮌) and the Menu button (M) simultaneously for 3 seconds, and then select "2. Input/Output Status".

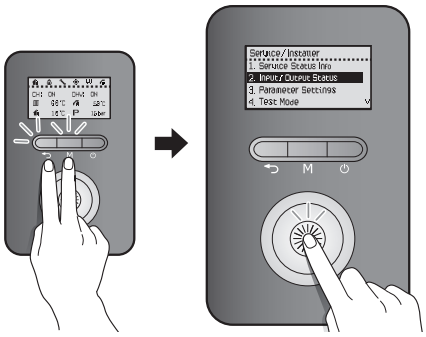

Rotate the Command dial (◎) to switch between the information items. Press the Command dial (◎) to select an item and view the information.

Press the Back button (⮌) to return to the previous screen or menu.

System/Regular Models

Item	Description
1. Switched Live Status	CH switched live input status
2. CH Thermostat Status	CH thermostat input status
3. DHW Thermostat Status	DHW thermostat input status
4. Boiler Pump Status	Boiler pump output status
5. 2 Way Valve	2 Way valve output status
6. 3 Way Valve	3 Way valve output status
7. HTL Input Status	HTL input status

Combi Models

Item	Description
1. Switched Live Status	CH switched live input status
2. CH Thermostat Status	CH thermostat input status
3. Boiler Pump Status	Boiler pump output status
4. 3 Way Valve	3 Way valve output status
5. HTL Input Status	HTL input status

11.5.3 Setting the Operation Parameters

To set the boiler's operation parameters, press the Back button (⮌) and the Menu button (M) simultaneously for 3 seconds, and then select "3. Parameter Settings".

> **CAUTION**
>
> Parameters must be set by a qualified professional with an extensive understanding of the boiler system. Setting parameters improperly may lead to property damage or injury.

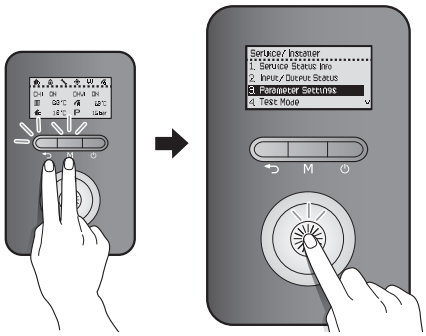

In the password screen, rotate the Command dial (◎) to change numbers and places, and press the Command dial (◎) to enter the password.

The factory default password is "1234".

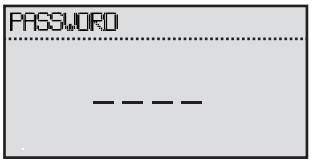

After entering the parameter setting screen, rotate the Command dial (◎) to switch between the parameters or to increase/decrease setting values. Press the Command dial (◎) to select a parameter or to confirm after making changes.

Press the Back button (⮌) to return to the previous screen or menu.

System/Regular Models

Item	Description
1. Supply MIN Set-point	Set the central heating supply minimum temperature. • Setting range: 25°C – [MAX Set-point – 20°C] • Default: 40°C
2. Supply MAX Set-point	Set the central heating supply maximum temperature. • Setting range: [MIN Set-point + 20°C] – 85°C • Default: 85°C
3. CH Burner Off Diff	Set the temperature range for turning off central heating. • Setting range : 0°C – 30°C • Default : 0°C
4. CH Burner On Diff	Set the temperature range for turning on central heating. • Setting range : 1°C – 30°C • Default : 20°C
5. Anti Fast Cycling Time*	Set the anti-fast cycling time. • Setting range: 0 – 20 min • Default: 3 min
6. Freeze protection	Set the pump freeze protection temperature. • Setting range: 6°C – 10°C • Default: 10°C **Note** The system freeze protection temperature is set based on the pump freeze protection temperature.
7. Boiler Pump Delay	Set the boiler pump off delay time. • Setting range: 3 – 40 min • Default: 40 min
8. Low Pressure	Set the low water pressure. • Setting range: 0.1 – 1.2 bar • Default: 0.4 bar
9. Oil CMPS Rate	Set the oil consumption compensation rate. • Setting range : -25% – 25% • Default : 0 %
10. Service Notif Time	Set the time for service notification. • Setting range: 30 – 3650 days (10 years) • It can be set in 10 day increments. • Default: 1820 days (5 years)

Item	Description
11. Service Notif Cycle	Set the service notification according to the operating times. • Setting range: 300 – 36500 cycles • It can be set in 100 cycle increments. • Default: 18200 cycles
12. Factory Reset	Initialize all parameter settings (panel and PCB) to factory default.
13. P/W Change	Change the parameter setting password. Rotate the Command dial () to change numbers and places, and press the Command dial () to save the new password.

Combi Models

Item	Description
1. Supply MIN Set-point	Set the central heating supply minimum temperature. • Setting range: 25°C – [MAX Set-point – 20°C] • Default: 40°C
2. Supply MAX Set-point	Set the central heating supply maximum temperature. • Setting range: [MIN Set-point + 20°C] – 85°C • Default: 85°C
3. CH Burner Off Diff	Set the temperature range to turn off central heating. • Setting range : 0°C – 30°C • Default : 0°C
4. CH Burner On Diff	Set the temperature range to turn on central heating. • Setting range : 1°C – 30°C • Default : 20°C
5. DHW Pre-Heat Set Temp	Set the DHW Pre-Heating Set temperature. • Setting range: [DHW Set Temp + 10°C] – 80°C • Default: 75°C
6. DHW Burner Off Diff	Set the temperature range to turn off Domestic Hot Water. • Setting range: 0°C – 30°C • Default: 0°C
7. DHW Burner On Diff	Set the temperature range to turn on Domestic Hot Water. • Setting range: 1°C – 30°C • Default: 20°C
8. Anti Fast Cycling Time*	Set the anti-fast cycling time. • Setting range: 0 – 20 min • Default: 3 min
9. Freeze protection	Set the pump freeze protection temperature. • Setting range: 6°C – 10°C • Default: 10°C **Note** The system freeze protection temperature is set based on the pump freeze protection temperature.
10. Boiler Pump Delay	Set the boiler pump off delay time. • Setting range: 3 – 40 min • Default: 40 min
11. Low Pressure	Set the low water pressure. • Setting range: 0.1 – 1.2 bar • Default: 0.4 bar
12. Oil CMPS Rate	Set the oil consumption compensation rate. • Setting range : -25% – 25% • Default : 0 %
13. Service Notif Time	Set the time for service notification. • Setting range: 30 – 3650 days (10 years) • It can be set in 10 day increments. • Default: 1820 days (5 years)
14. Service Notif Cycle	Set the service notification according to the operating times. • Setting range: 300 – 36500 cycles • It can be set in 100 cycle increments. • Default: 18200 cycles
15. Factory Reset	Initialize all parameter settings (panel and PCB) to factory default.
16. P/W Change	Change the parameter setting password. Rotate the Command dial () to change numbers and places, and press the Command dial () to save the new password.

Note

- If you enter an incorrect password 10 times or make no inputs for 5 minutes, the boiler will return to Normal mode.
- To return to the previous mode, press the Reset button.
- The factory default password is "1234".
- If you make no inputs for 10 seconds in the Parameter Edit mode, the current parameter value will be saved automatically.
- Press and hold the Back button (⮌) in Parameter Edit mode for 5 seconds to reset individual parameters to their default values.
- When you reset one of the following parameters, the corresponding parameter will be reset automatically:
  - Supply Min or Max capacity limit
  - Return Min or Max capacity limit

* The anti-fast cycling time is the duration that the boiler stops its central heating operation when the central heating supply or return temperatures reach the set values for boiler operation stop temperatures. The boiler will not resume central heating until the duration elapses, even when the central heating supply or return temperatures return to within the set ranges.

11.5.4 Diagnosing the Boiler System

To run a series of test procedures for a system diagnosis, press the Back button (⮌) and the Menu button (M) simultaneously for 3 seconds, and then select "4. Test Mode".

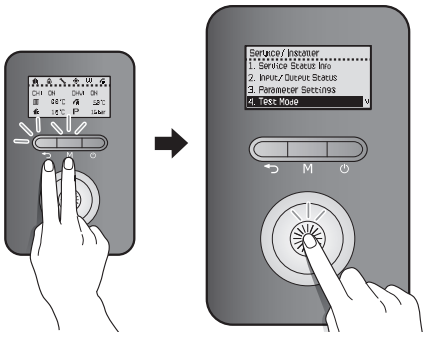

Rotate the Command dial (◎) to switch between the test procedures. Press the Command dial (◎) to run a test procedure.

Press the Back button (⮌) to return to the previous screen or menu.

System/Regular Models

Item	Description
1. Fan Motor	Test the fan operation by manually changing the fan speed. • From a stopped state, the fan speed gradually increases and reaches the top speed, and then the fan speed decreases until the fan stops operating. • Rotate the Command dial (◎) to run or stop the fan test.
2. Boiler Pump	Test the boiler pump operation. • The boiler pump is turned on as soon as you enter the test mode. • Press the Command dial (◎) to toggle the pump operation (On -> Off/Off -> On).
3. 2 Way Valve	Test the 2 way valve operation. • The 2 way valve is turned on as soon as you enter the test mode. • Press the command dial (◎) to toggle the valve operation (On -> Off/Off -> On). **Note** This option is not performed on Combi boilers.

Item	Description
4. 3 Way Valve	Test the 3 way valve operation. • The 3 way valve is turned on as soon as you enter the test mode. • Press the command dial (⊛) to toggle the valve operation [On(DHW) -> Off(CH)/Off(CH) -> On(DHW)].

Combi Models

Item	Description
1. Fan Motor	Test the fan operation by manually changing the fan speed. • From a stopped state, the fan speed gradually increases and reaches the top speed, and then the fan speed decreases until the fan stops operating. • Rotate the Command dial (⊛) to run or stop the fan test.
2. Boiler Pump	Test the boiler pump operation. • The boiler pump is turned on as soon as you enter the test mode. • Press the Command dial (⊛) to toggle the pump operation (On -> Off/Off -> On).
3. 3 Way Valve	Test the 3 way valve operation. • The 3 way valve is turned on as soon as you enter the test mode. • Press the Command dial (⊛) to toggle the valve operation [On(DHW) -> Off(CH)/Off(CH) -> On(DHW)].
4. Flow Control Valve	Test the flow control valve operation. Rotate the valve from its current position to fully (0%), then fully closed (100%) and then back to the starting position.
5. Mixing Valve	Test the mixing valve operation. Rotate the valve from its current position to fully (0%), then fully closed (100%) and then back to the starting position.

11.5.5 Setting the Special Operation Modes

To operate the boiler in special operation modes, press the Back button (⮌) and the Menu button (M) simultaneously for 3 seconds, and then select "5. Special Operations".

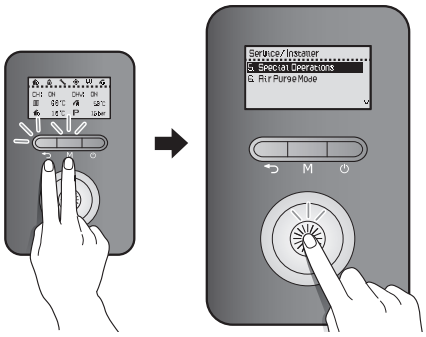

Rotate the Command dial (⊛) to switch between the operation modes. Press the Command dial (⊛) to select an operation mode.

The boiler resumes operation in normal operation mode if no input is detected for 3 hours.

Press the Back button (⮌) to return to the previous screen or menu.

Item	Description
1. Normal (Default)	Set the boiler to run in normal operation mode.
2. MIN	Set the boiler to run in minimum operation mode.
3. MAX	Set the boiler to run in maximum operation mode.

11.5.6 Setting the Air Purge Modes

To run the boiler in a special operation mode, press the Back button (⮌) and the Menu button (M) simultaneously for 3 seconds, and then select "6. Air Purge Mode."

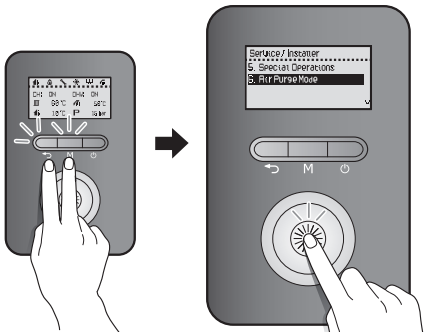

Rotate the Command dial (◎) to switch between the operation modes. Press the Command dial (◎) to select an operation mode.

The boiler resumes in normal operation mode if no input is detected for 3 hours.

Press the Back button (⮌) to return to the previous screen or menu.

Item	Description
1. CH Pipe Air Purge	Run an air purge on the central heating pipe.
2. DHW Pipe Air Purge	Run an air purge on the DHW pipe. **Note** • For Combi models, air purge can be performed regardless of the DHW operation setting. • For System models, air purge can only be performed when the DHW operation is set to: - Cylinder Stat - Cylinder Sensor

11.6 Error Codes

When an error code appears on the front panel, refer to the following chart for a definition and possible remedy for the situation.

Item	Error Code	Description	Reset
Combustion	E003	Ignition failure	Manual
	E004	False flame detection	Auto
	E012	Flame loss	Manual
	E016	Heat exchanger overheat	Manual
	E030	Abnormal exhaust temperature	Manual/Auto
	E046	Abnormal operation: Heat exchanger overheating sensor	Auto
	E047	Abnormal operation: Exhaust thermostat	Manual/Auto
	E056	Abnormal operation: Oil pump	Manual
Air Circulation	E109	Abnormal operation: Fan	Manual
	E110	Exhaust blockage (Condensate blockage)	Manual
	E123	Abnormal operation: Fan Output	Manual
	E127	Abnormal operation: APS	Manual/Auto
Central Heating Circulation	E205	Heating supply thermistor open or short circuit	Auto
	E291*	Supply/Return inversion limit	Manual
Water Supply	E302	Low water pressure	Auto
	E352	High water pressure	Auto
	E353	Abnormal operation: Water pressure sensor	Auto
DHW Circulation	E407	DHW Outlet thermistor Open or Short Circuit	Alarm
	E421	DHW Inlet thermistor Open or Short Circuit	Alarm
	E441	DHW Outlet thermistor Open or Short Circuit	Alarm
	E445	Abnormal operation: Mixing valve	Alarm
Controller (PCB)	E515	Abnormal operation: Relay feedback (PCB)	Manual
	E517	Abnormal operation: DIP switch setting (PCB)	Manual
	E594	Abnormal operation: EEPROM (PCB)	Alarm
Controller (MCU)	E615	Abnormal operation: Input and memory (MCU)	Manual
Installation	E740	Abnormal operation: Outdoor temperature sensor	Auto
	E782	Abnormal operation: Main panel communication	Auto
	E783	Abnormal operation: OpenTherm remote control	Auto

* Error E291 occurs only in the regular model.

If the error code is not cleared by resetting the boiler functioning (see "11.3.3 Resetting the Boiler") or if it occurs repeatedly, call the nearest official Technical Assistance Service (TAS), indicating the number of the error code appearing on the front panel.

12. Maintaining the Boiler

12.1 Cleaning the Boiler

> **CAUTION**
>
> Make sure the boiler is turned off and the power supply is disconnected before cleaning the boiler. The boiler may remain hot for several minutes after it is turned off. To prevent burns, wait until the boiler has cooled down before cleaning.

To clean the boiler, wipe the outside with a damp cloth. Use a non-acidic, non-abrasive cleaner to remove any surface stains. The front panel is moisture resistant, but it is not waterproof. Keep it as dry as possible.

12.2 Draining the Boiler

You will need to drain either both the central heating side and domestic hot water (DHW) side, or one side only before performing maintenance tasks, such as cleaning the adaptor filter, or to prevent the boiler from freezing when it will not be used for an extended period.

Refer to "2.6 Dimensions" on page 15 for details about part locations.

To drain the boiler:

1. Place a bucket under the boiler, to collect the residual water inside the boiler.
2. Press the Power button (⏻) on the front panel to turn off the boiler.

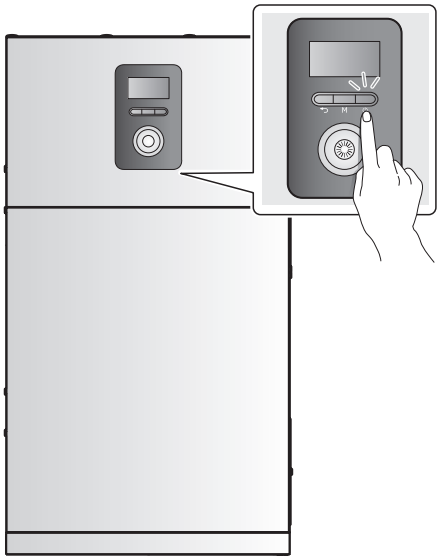

3. Disconnect the power supply from the boiler.
4. Close the oil line valve.

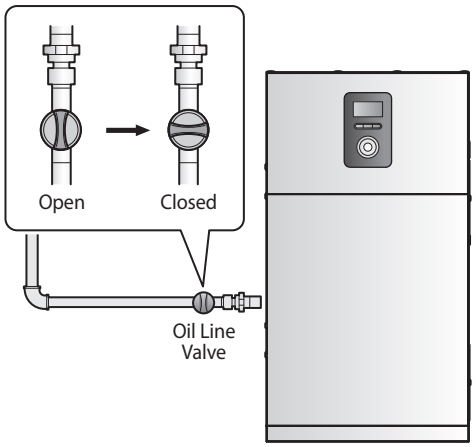

5. Close the water supply valve on the inlet to the boiler. If there is no valve, turn off the water supply at the water main.

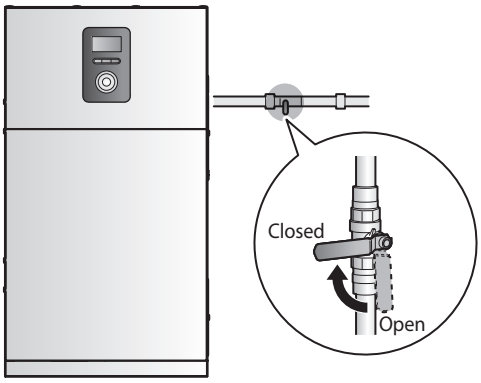

6. Close off any heating zones that do not require draining and open a drain valve to drain the central heating side.

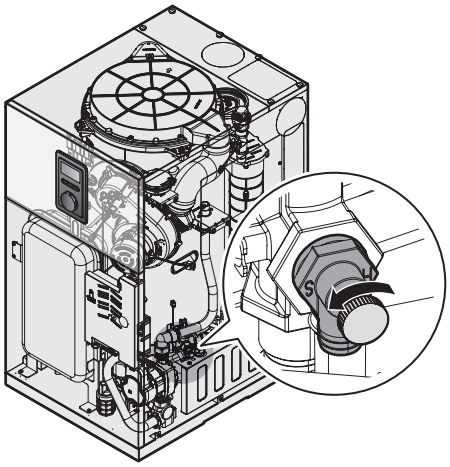

7. Open all domestic hot water taps completely to drain the water heating side. The water that remains in the plumbing lines will drain out.
8. Open the pump drain valve.
9. Allow the residual water to drain from the boiler.
10. When the water is completely drained out, close the drain valve.

Note To refill the boiler, follow the steps above in reverse.

12.3 Protecting the Boiler from Freezing

CAUTION

Damage due to freezing is not covered by the Navien limited warranty.

If the boiler is connected to a circuit that could freeze, the circuit pipes must be suitably insulated. All pipes installed outdoors must be insulated according to applicable legislation. The boiler electronic control includes a freeze protection function that prevents the boiler from freezing in very cold weather. It remains on standby and takes priority over all other boiler functions while the boiler is connected to the electrical mains and oil supply, i.e. it remains enabled even when the boiler is in standby position.

To ensure that the boiler does not freeze, follow these guidelines:

- **Do not unplug the power supply cord**, except for routine maintenance. The boiler has a freeze protection function that requires electricity. The freeze protection function will operate regardless of whether or not the power is turned on or off, as long as the electric supply is still connected.
- **Do not close the oil valve**, except for routine maintenance, as this will limit additional freeze protection.
- **If the boiler will not be used for an extended period**, drain the boiler. If the power or oil supplies must be disconnected for an extended period, drain the boiler. Freezing damage may occur if there is water remaining in the boiler in cold weather.

If hot water will not flow and you suspect that the boiler is frozen, follow these steps:

1. Press the Power button (⏻) on the front panel to turn off the boiler.
2. Close the oil line valve.

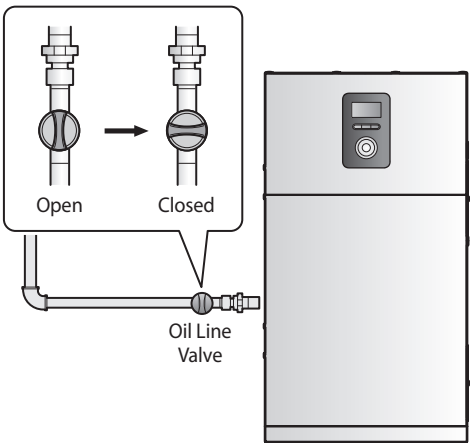

3. Open the hot water tap that is closest to the boiler.
4. Use a hair dryer or a portable electric heater to heat up both the primary and secondary heat exchangers.
5. Check every few minutes to see if water is running at the open tap.
6. When the water starts flowing again, check the boiler and piping for leaks. If you detect any leaks or the boiler is not operating properly, contact an authorised technician or licensed professional.

Note This boiler requires very little maintenance, however a qualified technician should inspect the boiler at the beginning of every heating season and/or when there is a problem.

12.4 Maintenance Schedules

Owner maintenance	
Daily	• Check boiler area • Check pressure/temperature gauge
Monthly	• Check flue piping • Check condensate drain
Periodically	• Check flue termination screens
Every 6 months	• Check boiler piping (oil and water) for leaks
Non-heating season	• Shut boiler down (unless boiler used for domestic hot water)

Service technician (See the following instructions)	
Annual Start-up	General: • Address reported problems • Inspect interior; clean and vacuum if necessary • Clean condensate trap and fill with fresh water • Check for leaks (water, oil, flue, condensate) • Verify flue and air lines are in good condition and sealed tight • Check system piping • Check control settings • Check ignition and UV sensor (clean and reposition) • Clean oil filter • Replace old flexible oil hose and oil nozzle with new ones • Check wiring and connections If combustion or performance indicate need: • Clean heat exchanger • Remove and clean return adaptor filter

12.5 Maintaining the Parts

WARNING

- Follow the service and maintenance procedures given throughout this manual and in component literature shipped with the boiler. Failure to perform the service and maintenance could result in damage to the boiler or system.
- Failure to follow the directions in this manual and component literature could result in severe personal injury or substantial property damage.
- The boiler should be inspected annually only by a qualified service technician. In addition, the maintenance and care of the boiler must be performed to assure maximum boiler efficiency and reliability. Failure to service and maintain the boiler and system could result in equipment failure.
- Electrical shock hazard – Turn off power to the boiler before any service operation on the boiler except as noted otherwise in this instruction manual. Failure to turn off electrical power could result in electrical shock, causing severe personal injury.

Addressing the Reported Problems

Inspect any problems reported by the owner and correct before proceeding.

Inspecting the Installation Area

1. Verify that boiler area is free of any combustible materials, petrol and other flammable vapours and liquids.
2. Verify that air intake area is free of any of the contaminants listed in Installation & Operation Manual. If any of these are present in the boiler intake air vicinity, they must be removed. If they cannot be removed, reinstall the air and flue lines per the Installation & Operation Manual.

Inspecting the Boiler Interior

1. Remove the front cover and inspect the interior of the boiler.
2. Vacuum any sediment from inside the boiler and components. Remove any obstructions.

Cleaning the Condensate Trap

1. Loosen the eight screws on the condensate trap cover and remove the cover, case packing, ball, ball packing, ball guide packing, and ball guide.

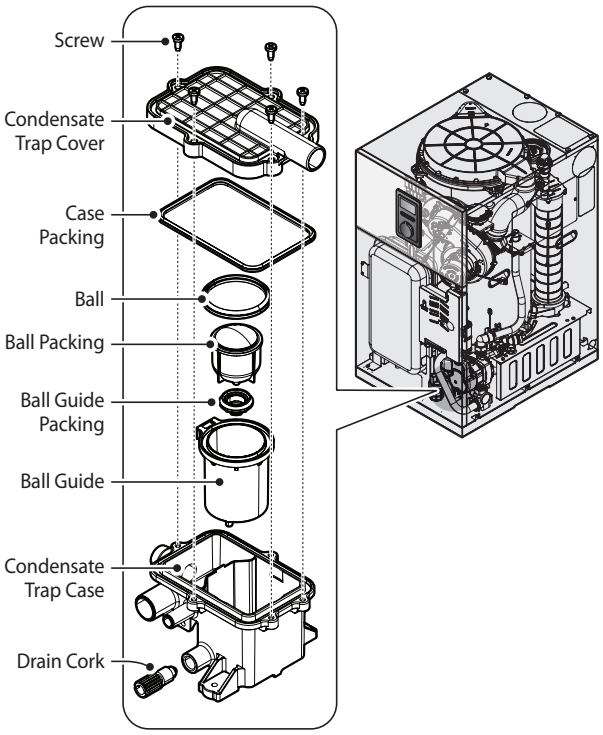

2. Inspect the condensate drain line, condensate fittings, condensate trap, and the drain cork.
3. Remove any sediment from the trap.
4. Fill with fresh water until the water begins to pour out of the drain.

Checking all Piping for Leaks

Eliminate all system or boiler leaks. Continual fresh makeup water will reduce boiler life. Minerals can build up in sections, reducing heat transfer, overheating heat exchanger, and causing heat exchanger failure. Leaking water may also cause severe property damage.

1. Inspect all water and oil piping and verify to be leak free.
2. Look for signs of leaking lines and correct any problems found.

Checking the Flue System and Air Piping

1. Visually inspect the entire gas flue system for blockage, deterioration or leakage. Repair any joints that show signs of leakage.
2. Verify that boiler flue discharge and air intake are clean and free of obstructions.

> **WARNING**
>
> Failure to inspect for the above conditions and have them repaired can result in severe personal injury.

Checking the Water System

1. Verify all system components are correctly installed and operational.
2. Check the cold fill pressure for the system. Verify it is correct (must be a minimum of 0.8 bar).
3. Watch the system pressure as the boiler heats up (during testing) to ensure pressure does not rise too high.

Note
- If the system contains glycol, test for proper concentration as recommended by manufacturer.
- Excessive pressure rise indicates expansion vessel sizing or performance problem.

4. Inspect automatic air flues and air separators. Remove air flue caps and briefly press push valve to flush flue.
5. Replace caps. Make sure flues do not leak. Replace any leaking flues.

Inspecting the Flame Detector C.D.S Sensor and Ignition

1. Remove the flame detector C.D.S sensor at the bottom of the burner by pulling it.

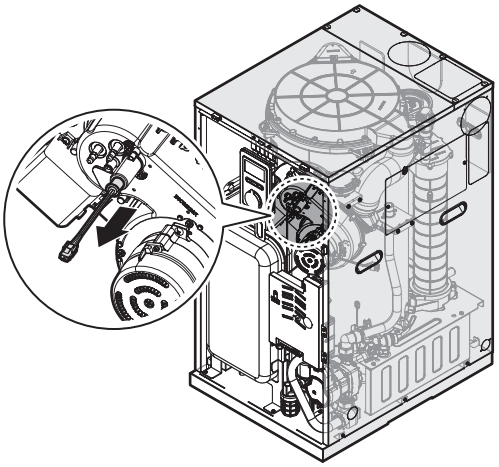

2. Remove any deposits accumulated at the bottom of the C.D.S sensor.
3. Remove the fan and burner assembly.

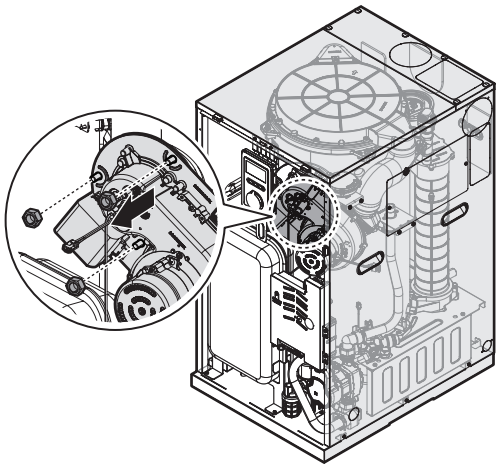

> **CAUTION**
>
> Do not disconnect the fan wire while power is on. It will cause damage to the fan.

4. Remove any deposits accumulated on the ignition.

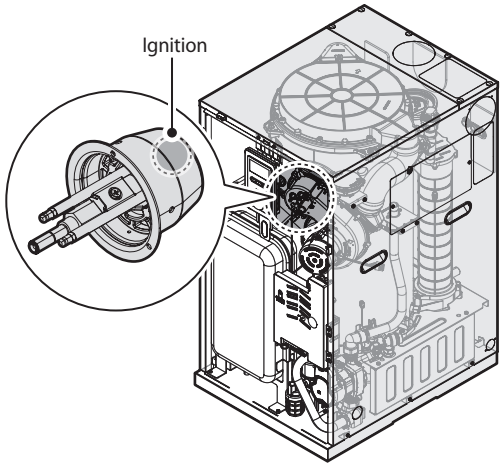

Note Refer to the following illustrations and table for details about the ignition dimension.

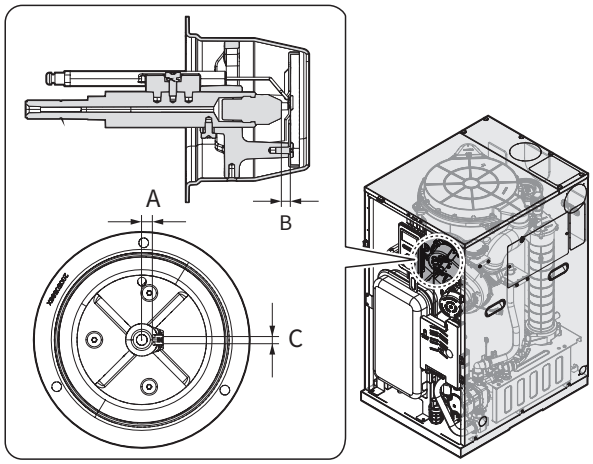

Model		21K	28K	34K
Ignition Dim.	A	5 mm		
	B	5 mm		
	C	2 mm		

Replacing the Flexible Oil Hose and Oil Nozzle

CAUTION

Using a worn-out flexible oil hose for a long time may block the nozzle. A blocked nozzle will result in the formation of soot and the burner will not ignite properly which may lead to property damage or injury.

1. Remove the fan and burner assembly.

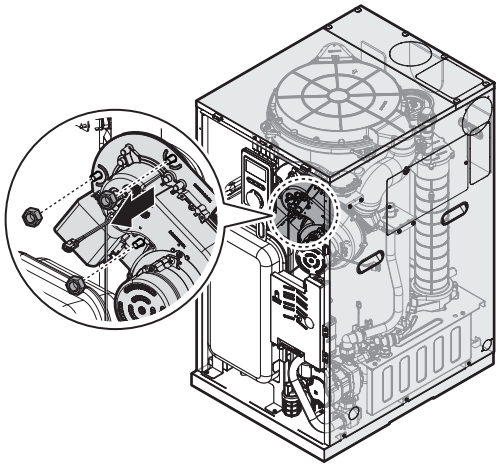

CAUTION

Do not disconnect the fan wire while power is on. It will cause damage to the fan.

2. Replace the old flexible oil hoses with new ones.

3. Remove the three screws on the burner housing and replace the old oil nozzle with a new one.

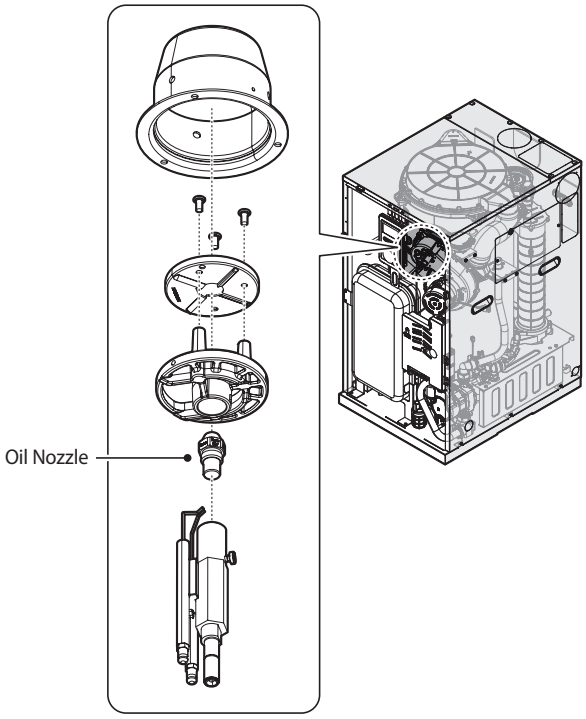

Model	21K	28K	34K
Oil Nozzle	0.50G 80˚S	0.60G 80˚S	0.75G 80˚S

Checking the Ignition Ground Wiring

1. Check that the ground wire is in good condition and securely attached to the boiler casing.
2. Check ground continuity of wiring using a continuity tester.
3. Replace ground wires if ground continuity is not satisfactory.

Checking all Boiler Wiring

Inspect all boiler wiring, making sure wires are in good condition and securely attached.

Checking the Control Settings

Check settings of external limit controls (if any) and adjust if necessary.

Performing Start-up and Checks

1. Start boiler and make sure that the boiler is operating properly.
2. Verify cold fill pressure is correct and that operating pressure does not go too high.

Cleaning the Oil Filter in the Oil Pump

Refer to the following illustration to see the location of the oil pump.

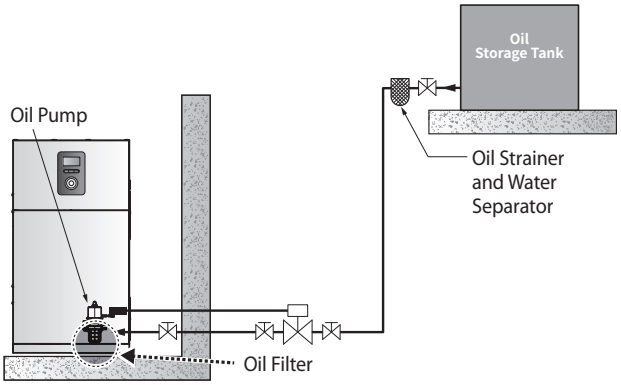

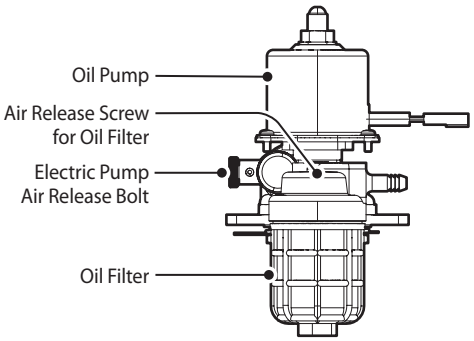

[Oil Pump Assembly]

If the oil filter is dirty, stop operation, close the oil valve, and replace the oil filter.

Note

- When the oil filter is removed, air may enter the oil line, which can prevent ignition.
  After replacing the oil filter, you must release any air from the fuel line and electric pump.
- After assembling the oil filter, check for any oil leaks.
- Wear gloves when replacing the filter to avoid getting oil on your hands.

If the oil tank is positioned above the oil filter:

1. Use a cross screwdriver to loosen the air release screw on the top of the oil filter.
2. Once all air is released and oil begins to flow out, tighten the air release screw again.

If the oil tank is positioned below the oil filter:

1. Loosen the air release bolt on the electric pump and turn on the boiler power.
   - After approximately six to seven seconds, the electric pump will make a clicking sound as it releases air, and the controller's check lamp will light up, stopping the boiler.
2. Press the controller's restart button repeatedly to continue releasing all the air.
3. Once all air is released and oil begins to flow, tighten the air release bolt, press the reset button again, and ignite the boiler.

Note

- Make sure to prevent oil from spilling onto the floor during air release.
- Do not fully loosen the air release bolt on the electric pump, as oil will flow out of the bolt hole rather than the rubber hose.
- Wear gloves to avoid getting oil on your hands.

Measuring Combustion

Measure combustion 2 minutes after boiler operation.

Forced operation of the Min/Max operation mode can be set by selecting the PCB DIP and panel settings.

- PCB DIP Switch 1 (set of 8): See page 40.
  1) Normal (Default): 1-OFF, 2-OFF
  2) Min: 1-OFF, 2-ON
  3) Max: 1-ON, 2-OFF

Control the oil pressure based on the CO_2 or O_2 levels.

Description		21K	28K	34K
Min/Max	O_2	4.5–7.5 %	4.5–7.5 %	4.5–7.5 %
	CO_2	10.5–12 %	10.5–12 %	10.5–12 %

Review with the Owner

1. Review the User's Information Manual with the owner.
2. Emphasise the need to perform the maintenance schedule.
3. Remind the owner of the need to call a licensed contractor should the boiler or system exhibit any unusual behaviour.
4. Remind the owner to follow the proper shutdown procedure and to schedule an annual start-up at the beginning of the next heating season.

13. Appendices

13.1 Wiring Diagram

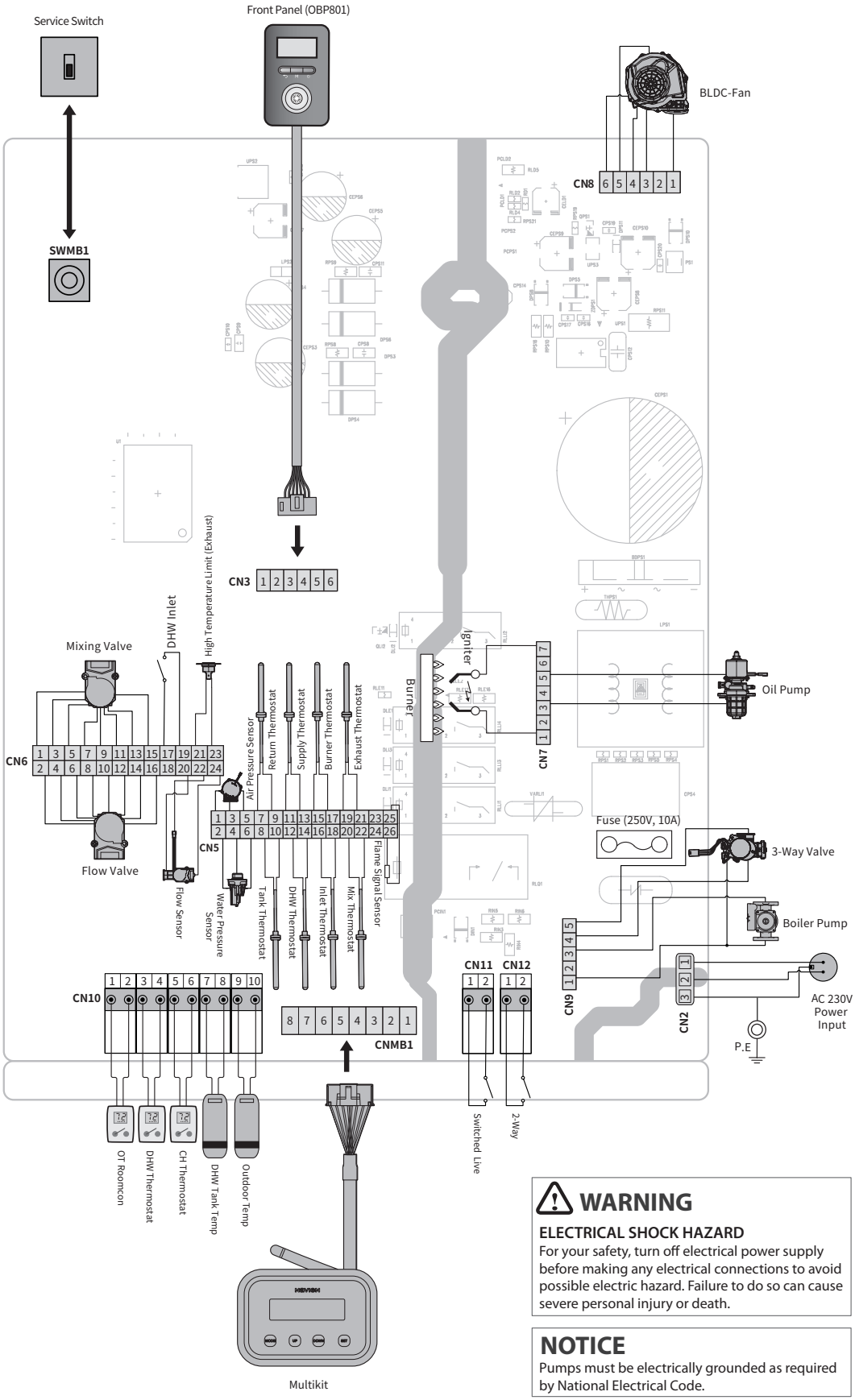

LCB500

⚠ WARNING

ELECTRICAL SHOCK HAZARD

For your safety, turn off electrical power supply before making any electrical connections to avoid possible electric hazard. Failure to do so can cause severe personal injury or death.

NOTICE

Pumps must be electrically grounded as required by National Electrical Code.

13.2 Component Assembly Diagrams and Parts

13.2.1 Case Assembly

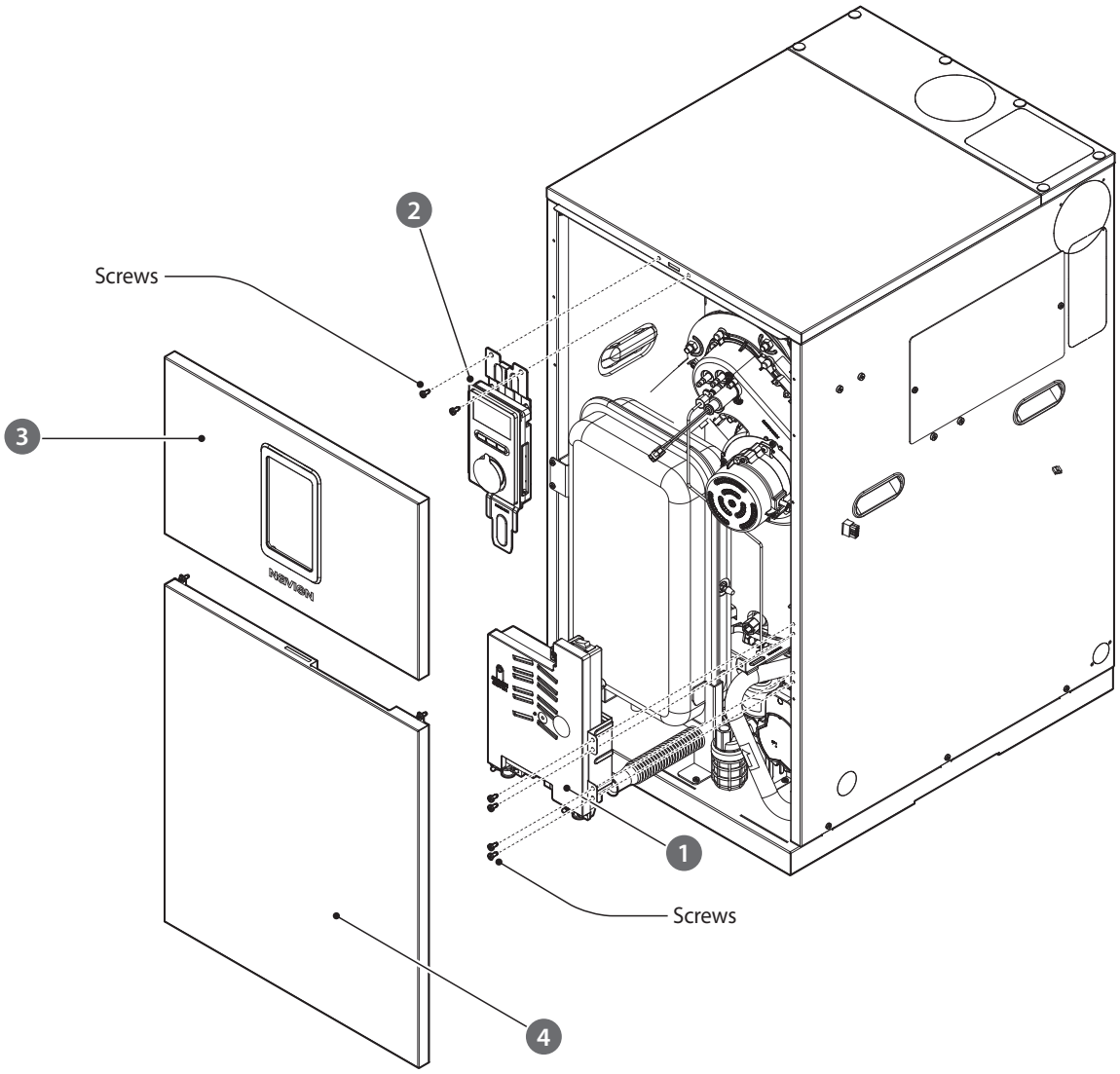

#	Description	Part #	Remark
1	Controller	30040436A	Combi
		30040438A	System
		30040437A	Regular
2	Front Panel	30024506A	Combi/System/Regular
3	Upper-front Cover	30041398A	Internal (Combi)
		30041439A	Internal (Sys/Reg)
		20082641A	External (Combi)
		20083403A	External (Sys/Reg)
4	Lower-front Cover	20082825A	Internal (Combi)
		20082897A	Internal (Sys/Reg)

13.2.2 Burner Assembly

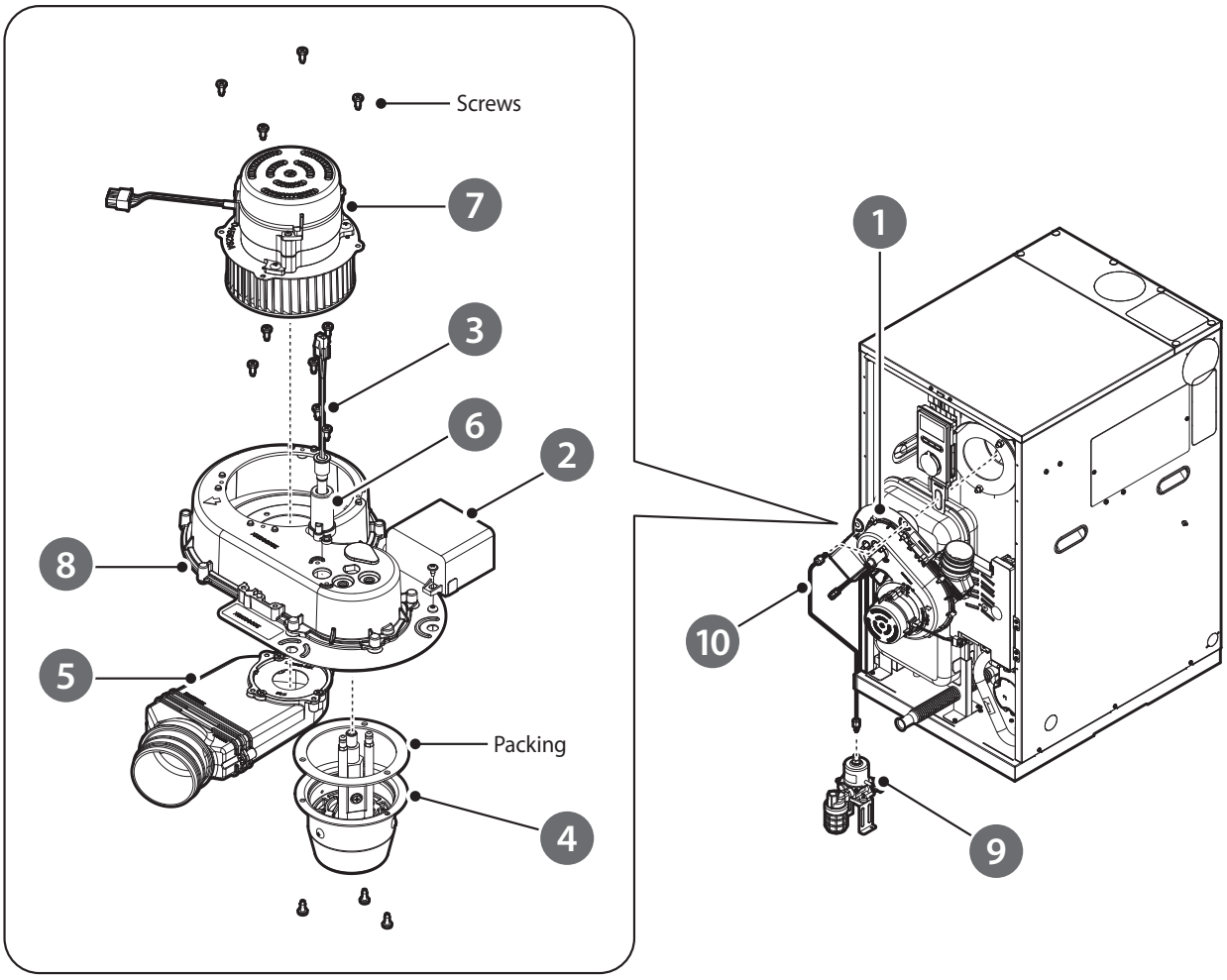

#	Description	Part #	Remark
1	Burner Assembly	30041407A	21kW
		30041399A	26kW
		30041400A	34kW
2	Ignition Transformer	30007701G	-
3	Flame Detector	30031619A	-
4	Flame Holder Assembly	30041472A	21kW
		30041473A	26kW
		30041475A	34kW
5	Burner Inlet Air Pipe	30041428A	21kW/26kW
		30041429A	34kW
6	Flame Detector Bracket	30032564A	-
7	Fan Assembly	30031691A	-
8	Burner Case	30032164A	21kW
		30035177A	26kW/34kW
9	Oil Pump	30041618A	21kW
		30041617A	26kW
		30041526A	34kW
10	Oil Pipe	30041396A	21kW (Combi)
		30041432A	26kW/34kW (Combi)
		30041461A	21kW (System/Regular)
		30041462A	26kW/34kW (System/Regular)

13.2.3 Burner Flame Holder Assembly

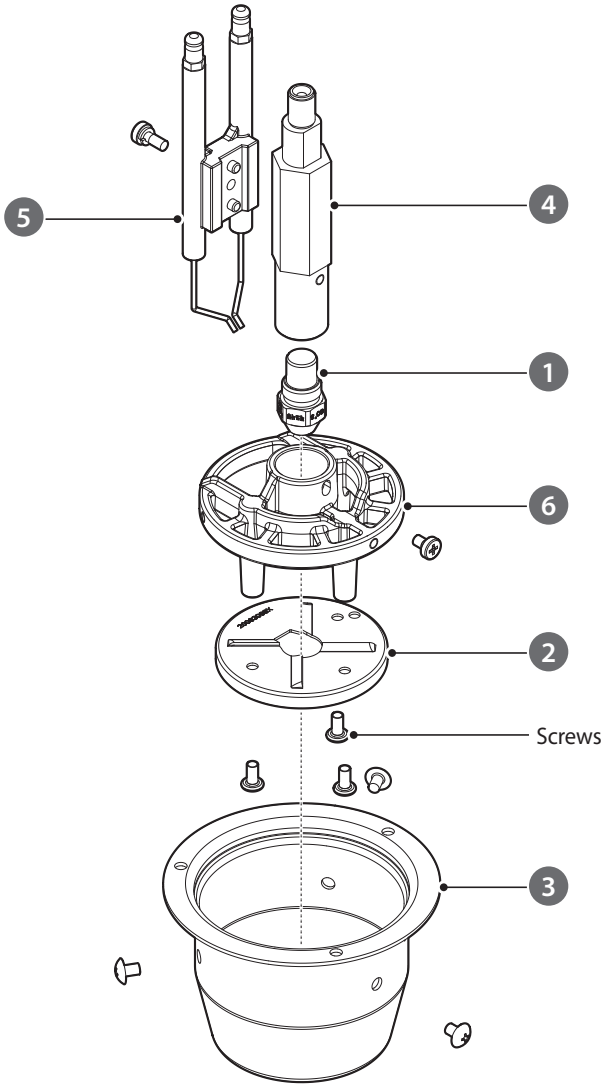

#	Description	Part #	Remark
1	Oil Nozzle	20051176A	21kW/0.50G 80S
		20051177A	26kW/0.60G 80S
		20080179A	34kW/0.75G 80S
2	Swirl	20083098A	21kW
		20050847A	26kW/34kW
3	Blower Tube	20059730A	21kW
		20080198A	26kW
		20084447A	34kW
4	Inner Tube	20082966A	-
5	Ignition Rod	20051808A	-
6	Flame Holder	20051699A	21kW
		20051700A	26kW/34kW

13.2.4 Heat Exchanger & Exhaust Duct Parts

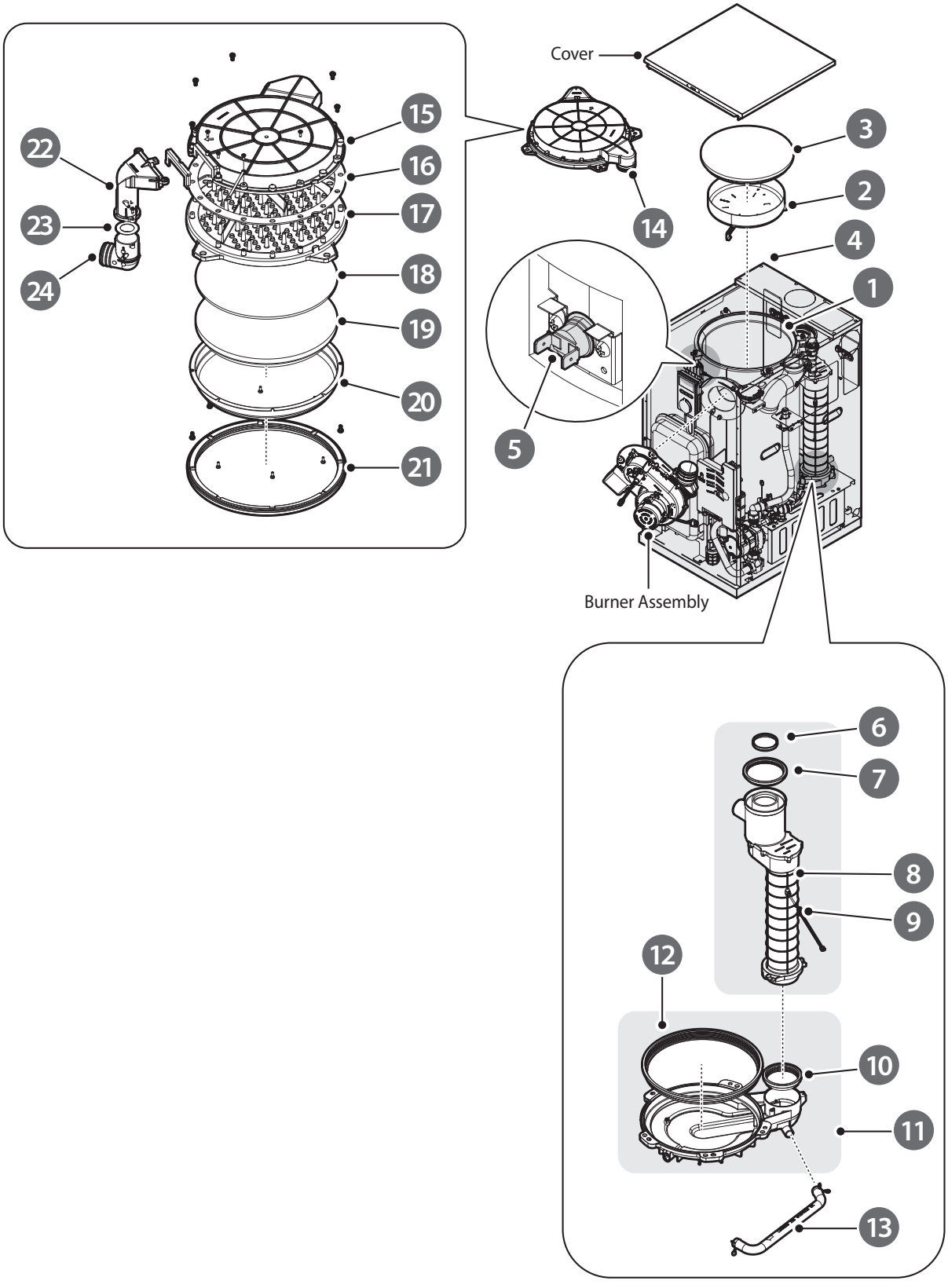

#	Description	Part #	Remark
1	Heat Exchanger	30039260A	21kW, Combi
		30040727A	21kW, System/Regular
		30039258A	26kW/34kW, Combi
		30040734A	26kW/34kW, System/Regular
2	Guide for Combustion	30030591A	21kW
		30034762A	26kW/34kW
3	Insulation	20043518A	21kW
		20067436A	26kW/34kW
4	Turbulence	20071407A	-
5	High Limit Stat for Heat Exchanger	30002557A	-
6	Packing for Exhaust	20029713A	-
7	Air Supply Packing	20043645A	-
8	Exhaust Duct	30041395A	21kW, Combi
		30041438A	21kW, System/Regular
		30041433A	26kW/34kW
9	Temperature Sensor	30020489A	-
10	Packing for Exhaust Duct	20040241A	-
11	Condensate Pan	30030339A	21kW
		30035175A	26kW/34kW
12	Packing for Condensate Pan	20058529A	21kW
		20058530A	26kW/34kW
13	Condensate Discharge Hose	30041401A	21kW Combi, 21kW/26kW/34kW System/Regular
		30041426A	26/34kW Combi
14	Combustion Room Cover Assembly	30031370A	21kW
		30030350A	26kW/34kW
15	Combustion Room Cover Case	20058517A	21kW
		20058518A	26kW/34kW
16	Combustion Room Cover Packing	20060906A	21kW
		20067385A	26kW/34kW
17	Combustion Room Cover	20058509A	21kW
		20058510A	26kW/34kW
18	Insolation	20058540A	21kW
		20058541A	26kW/34kW
19	Insolation Board	20058538A	21kW
		20058539A	26kW/34kW

#	Description	Part #	Remark
20	Combustion Room Cover Bracket	20044606A	21kW
		20058565A	26kW/34kW
21	Combustion Room Cover Packing	20044609A	21kW
		20058566A	26kW/34kW
22	APS Connect Pipe	20078786A	21kW
		20078825A	26kW/34kW
23	Orifice	20077744A	21kW
		20077765A	26kW
		20068209A	34kW
24	Inlet Pipe	20076288A	21kW
		20076287A	26kW/34kW

13.2.5 Water Piping Parts

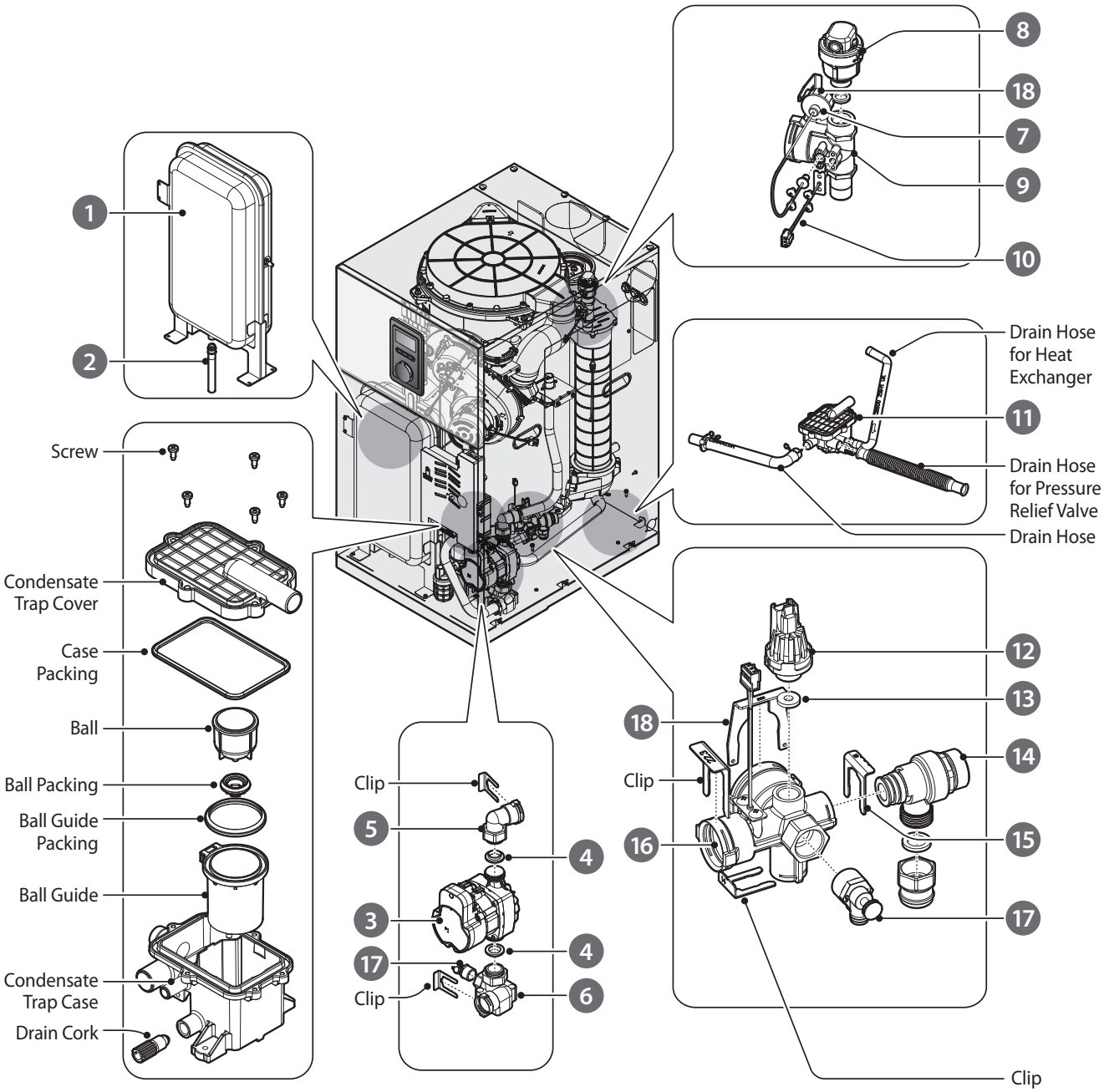

#	Description	Part #	Remark
1	Expansion Vessel	30040440A	
2	Flexible Hose	30041430A	
3	Circulation Pump	30036404A	
4	Packing	20044484A	
5	Pump Inlet Adaptor	30022969A	
6	Pump Outlet Adaptor	30022970A	
7	Pressure Gauge	30020258A	
8	Air Vent	30023517A	
9	Central Heating Supply Water Adaptor	30041945A	Combi
		30021072A	System/Regular
10	Temperature Sensor	30012907A	
11	Condensate Trap	30041379A	
12	Pressure Sensor	30014699A	
13	Pressure Sensor Packing	20006873A	
14	Pressure Relief Valve	30002251A	
15	Clip	20007837B	
16	Central Heating Return Water Adaptor	20056241A	Combi/System
		20043464A	Regular
17	Drain Valve	20043465A	
18	Clip	20040255A	

13.2.6 DHW Parts

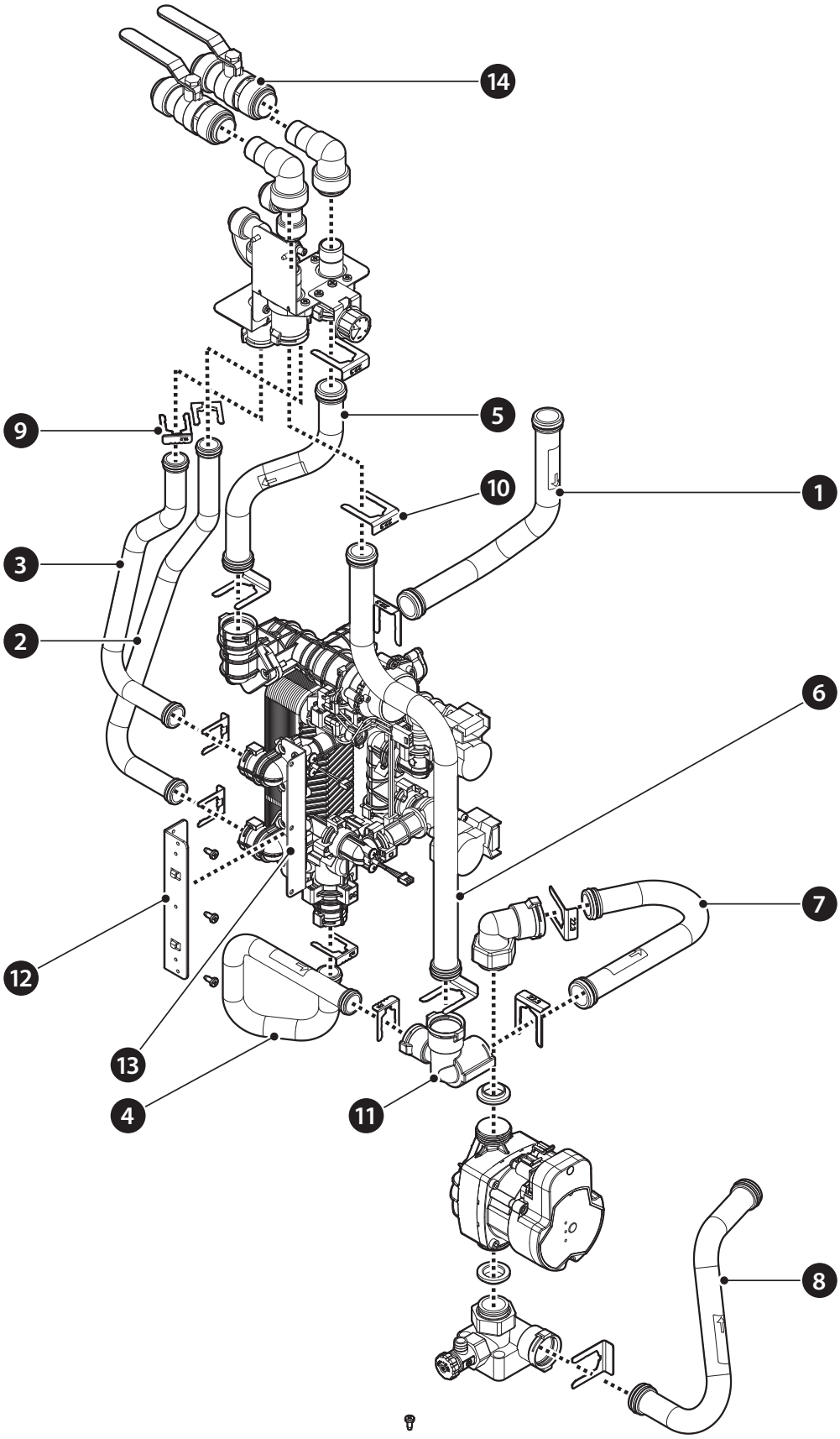

#	Description	Part #	Remark
1	Pipe Heat Exchanger Outlet	30041410A	21K
		30041409A	26/34K
2	Pipe Domestic Cold Water Inlet	30041381A	
3	Pipe Domestic Hot Water Outlet	30041380A	
4	Pipe Circulation DHW Return	30041418A	
5	Pipe Heating Outlet	30041420A	
6	Pipe Heating Return	30041425A	
7	Pipe Heating Return Pump	30041384A	
8	Pipe Heat Exchanger Inlet	30041422A	21K Internal
		30041386A	21K External
		30041419A	26/34K Internal
		30041385A	26/34K External
9	Clip STS430,Ø19.2×1t	20007733B	
10	Clip STS430,Ø22.3×1t	20033662A	
11	Adaptor Heating Return	20046875A	
12	Bracket DHW Block	20078776A	
13	DHW Block Assembly	30023207A	
14	Valve Kit	30041812A	

13.2.7 DHW Block and Heating Supply Assembly

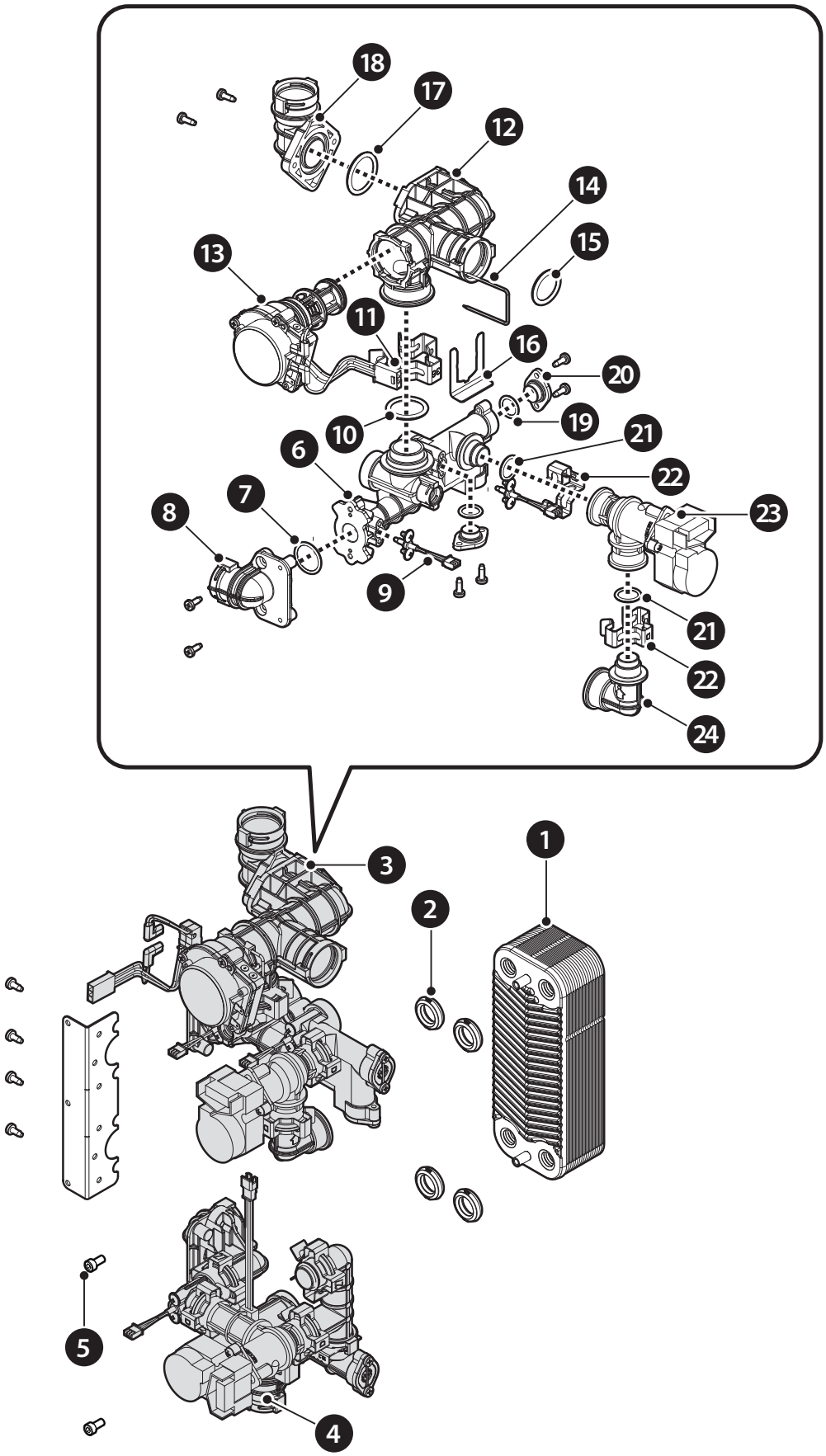

#	Description	Part #	Remark
1	DHW Heat Exchanger	30018296A	
2	Packing DHW Heat Exchanger	20035234B	
3	DHW Heating Supply Assembly	30023439A	
4	DHW Cold Water Inlet Assembly	30023438A	
5	Bolt Hex Wrench M5×10L	20009865A	
6	Manifold Heating Supply	20044482A	
7	O-ring P22	20018011A	
8	Adaptor DHW In/Outlet	20047162A	
9	Temperature Sensor	30015178A	
10	O-ring P26	20032409A	
11	Clip Ø36	20017724A	
12	Heating Water Return	20046493A	
13	3-Way Valve	XXXXXXXXA	
14	Clip Wire 3-Way Valve	20029414A	
15	O-ring P22	20033699A	
16	Clip STS430,Ø19.2×1t	20007733B	
17	O-ring P28	20022142A	
18	Adaptor Heating Water	20047161A	
19	O-ring P14	20011438A	
20	Cap	20017744A	
21	O-ring P16	20017210A	
22	Clip D Ø25	20007859A	
23	Mixing Valve	30011532A	
24	Adaptor Elbow	20025962B	

13.2.8 DHW Cold Water Inlet Assembly

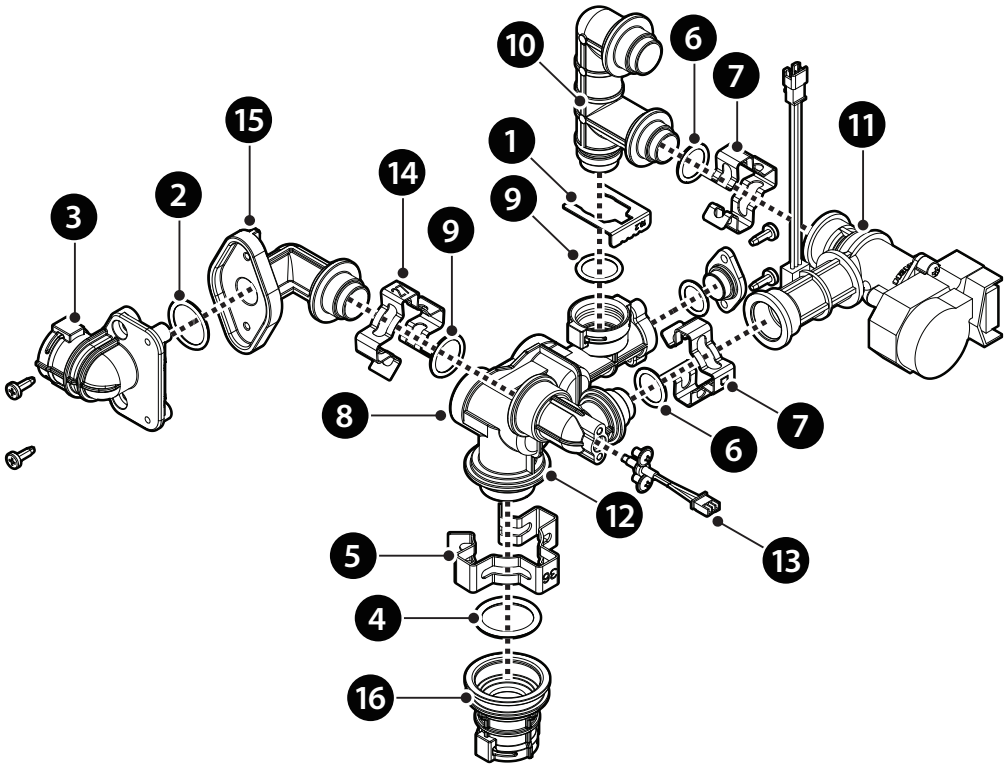

#	Description	Part #	Remark
1	Clip STS430,Ø19.2×1t	20007733B	
2	O-ring P22	20018011A	
3	Adaptor DHW In/Outlet	20047162A	
4	O-ring P26	20032409A	
5	Clip Ø36	20017724A	
6	O-ring P16	20017210A	
7	Clip D Ø25	20007859A	
8	Manifold Cold Water Inlet	20044471A	
9	O-ring P18	20006947A	
10	Adaptor Connect	20044469A	
11	Water Adjust Valve	30008247A	
12	Adaptor Elbow Temp. Sensor	20044470A	
13	Temperature Sensor	30022207A	
14	Clip Ø27	20017726A	
15	Adaptor DHW Outlet	20044477A	
16	Adaptor Manifold Connect	20047163A	

13.2.9 APS Hose Connection Locations

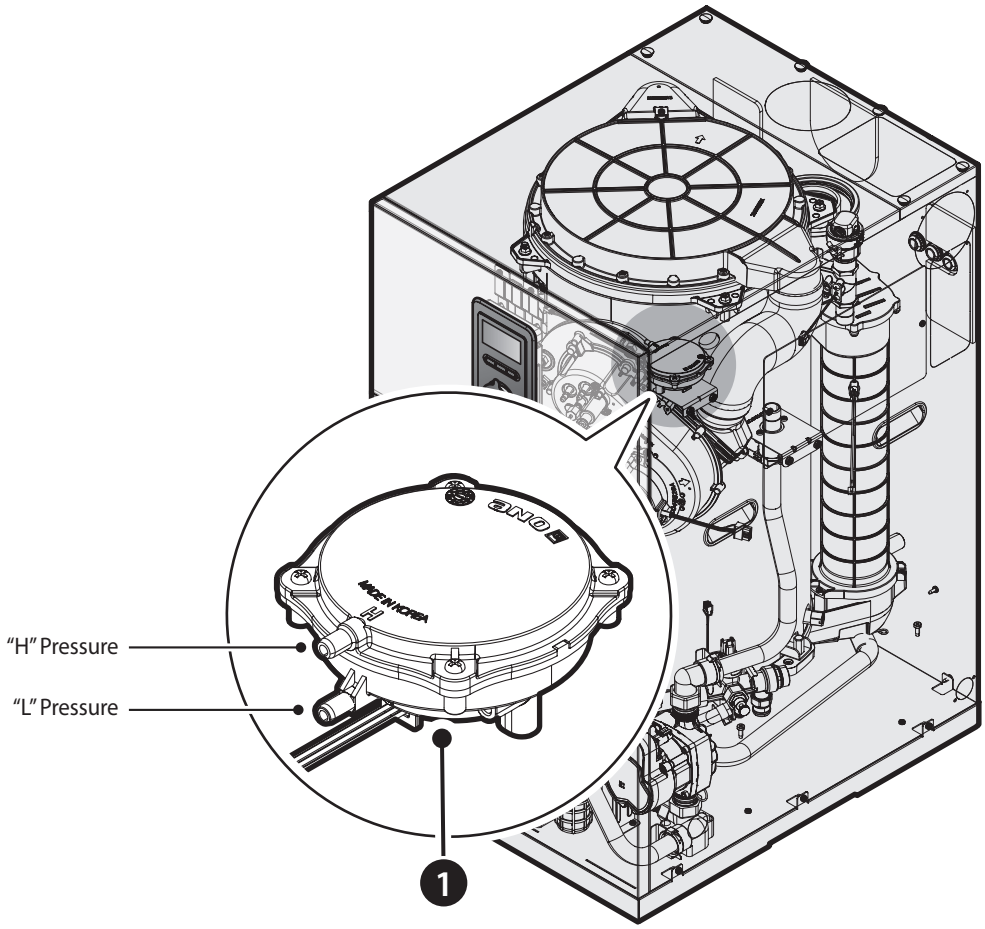

#	Description	Part #	Remark
1	Air Pressure Sensor	30022962A	

Memo